This is a digital copy of a book that was preserved for generations on library shelves before it was carefully scanned by Google as part of a project to make the world's books discoverable online.

It has survived long enough for the copyright to expire and the book to enter the public domain. A public domain book is one that was never subject to copyright or whose legal copyright term has expired. Whether a book is in the public domain may vary country to country. Public domain books are our gateways to the past, representing a wealth of history, culture and knowledge that's often difficult to discover.

Marks, notations and other marginalia present in the original volume will appear in this file - a reminder of this book's long journey from the publisher to a library and finally to you.

Usage guidelines

Google is proud to partner with libraries to digitize public domain materials and make them widely accessible. Public domain books belong to the public and we are merely their custodians. Nevertheless, this work is expensive, so in order to keep providing this resource, we have taken steps to prevent abuse by commercial parties, including placing technical restrictions on automated querying.

We also ask that you:

+ *Make non-commercial use of the files* We designed Google Book Search for use by individuals, and we request that you use these files for personal, non-commercial purposes.

+ *Refrain from automated querying* Do not send automated queries of any sort to Google's system: If you are conducting research on machine translation, optical character recognition or other areas where access to a large amount of text is helpful, please contact us. We encourage the use of public domain materials for these purposes and may be able to help.

+ *Maintain attribution* The Google "watermark" you see on each file is essential for informing people about this project and helping them find additional materials through Google Book Search. Please do not remove it.

+ *Keep it legal* Whatever your use, remember that you are responsible for ensuring that what you are doing is legal. Do not assume that just because we believe a book is in the public domain for users in the United States, that the work is also in the public domain for users in other countries. Whether a book is still in copyright varies from country to country, and we can't offer guidance on whether any specific use of any specific book is allowed. Please do not assume that a book's appearance in Google Book Search means it can be used in any manner anywhere in the world. Copyright infringement liability can be quite severe.

About Google Book Search

Google's mission is to organize the world's information and to make it universally accessible and useful. Google Book Search helps readers discover the world's books while helping authors and publishers reach new audiences. You can search through the full text of this book on the web at `http://books.google.com/`

Library
OF
Harry T. Cory
No. 264

Digitized by Google

GIFT OF
H. S. Coey

SIGILLVM · VNIVERSITATIS · CALIFORNIENSIS
FIAT LVX
MDCCCLXVIII

EX LIBRIS

Digitized by Google

Digitized by Google

Digitized by Google

Digitized by Google

Digitized by Google

MATTHIAS W. BALDWIN

Digitized by Google

HISTORY

OF THE

BALDWIN LOCOMOTIVE WORKS

FROM

1831 TO 1897.

PHILADELPHIA:
J. B. LIPPINCOTT COMPANY.
1897.

Digitized by Google

Digitized by Google

PLAN.

THE BALDWIN LOCOMOTIVE WORKS is situated with a front on Broad Street, Philadelphia, extending from Pennsylvania Avenue to Spring Garden Street. It also comprises one block bounded by Fifteenth and Sixteenth, Hamilton and Buttonwood Streets, and the greater part of two blocks between Seventeenth and Eighteenth, and from Buttonwood Street to Pennsylvania Avenue. The plan below shows the area occupied, over nine acres in all, of which between six and seven acres are under roof.

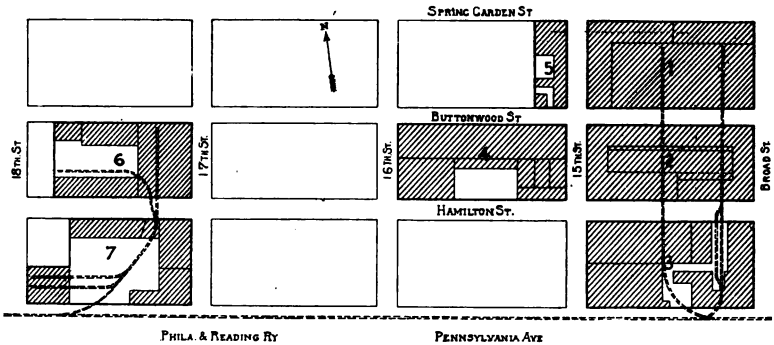

1. Main Office, Drawing Room, Erecting Shop, Cylinder Shop, Paint Shop, and Store Room.

2. Boiler Shop, Machine Shop, Brass Machine Shop, Brass Foundry, and Wheel Shop.

3. Machine Shop, Blacksmith Shop, Hammer Shop, and Power Plant.

4. Iron Foundry, Repair Shop, and Flange Shop.

5. Superintendent's Office, Laboratory, Pattern Shop, and Electrical Department.

6. Machine Shop, Tender Shop, and Sheet Iron Shop.

7. Spring Shop, Drop Hammer Shop, Hydraulic Smith Shop, Wood Shop, and Power Plant.

NOTE.—The shaded spaces indicate buildings occupied by the Baldwin Locomotive Works.

410

435951

Digitized by Google

Digitized by Google

HISTORY

OF THE

BALDWIN LOCOMOTIVE WORKS.

THE BALDWIN LOCOMOTIVE WORKS dates its origin from the inception of steam railroads in America. Called into existence by the early requirements of the railroad interests of the country, it has grown with their growth and kept pace with their progress. It has reflected in its career the successive stages of American railroad practice, and has itself contributed largely to the development of the locomotive as it exists to-day. A history of the Baldwin Locomotive Works, therefore, is, in a great measure, a record of the progress of locomotive engineering in this country, and as such cannot fail to be of interest to those who are concerned in this important element of our material progress.

MATTHIAS W. BALDWIN, the founder of the establishment, learned the trade of a jeweler, and entered the service of Fletcher & Gardiner, Jewelers and Silversmiths, Philadelphia, in 1817. Two years later he opened a small shop, in the same line of business, on his own account. The demand for articles of this character falling off, however, he formed a partnership, in 1825, with David Mason, a machinist, in the manufacture of bookbinders' tools and cylinders for calico-printing. Their shop was in a small alley which runs north from Walnut Street, above Fourth. They afterwards removed to Minor Street, below Sixth. The business was so successful that steam-power became necessary in carrying on their manufactures, and an engine was bought for the purpose. This proving unsatisfactory, Mr. Baldwin decided to design and construct one which should be specially

Digitized by Google

adapted to the requirements of his shop. One of these requirements was that it should occupy the least possible space, and this was met by the construction of an upright engine on a novel and ingenious plan. On a bed-plate about five feet square an upright cylinder was placed; the piston-rod connected to a cross-bar having two legs, turned downward, and sliding in grooves on the sides of the cylinder, which thus formed the guides. To the sides of these legs, at their lower ends, was connected by pivots an inverted U-shaped frame, prolonged at the arch into a single rod, which took hold of the crank of a fly-wheel carried by upright standards on the bed-plate. It will be seen that the length of the ordinary separate guide-bars was thus saved, and the whole engine was brought within the smallest possible compass. The design of the machine was not only unique, but its workmanship was so excellent, and its efficiency so great, as readily to procure for Mr. Baldwin orders for additional stationary engines. His attention was thus turned to steam engineering, and the way was prepared for his grappling with the problem of the locomotive when the time should arrive.

MR. BALDWIN'S FIRST ENGINE.

This original stationary engine, constructed prior to 1830, is still in good order and carefully preserved at the works. It has successively supplied the power in six different departments as they have been opened, from time to time, in the growth of the business.

The manufacture of stationary steam-engines thus took a prominent place in the establishment, and Mr. Mason shortly afterwards withdrew from the partnership.

In 1829–30 the use of steam as a motive power on railroads had begun to engage the attention of American engineers. A few locomotives had been imported from England, and one (which, however, was not successful) had been constructed at the West Point Foundry, in New York City. To gratify the

Digitized by Google

public interest in the new motor, Mr. Franklin Peale, then proprietor of the Philadelphia Museum, applied to Mr. Baldwin to construct a miniature locomotive for exhibition in his establishment. With the aid only of the imperfect published descriptions and sketches of the locomotives which had taken part in the Rainhill competition in England, Mr. Baldwin undertook the work, and on the 25th of April, 1831, the miniature locomotive was put in motion on a circular track made of pine boards covered with hoop iron, in the rooms of the Museum. Two small cars, containing seats for four passengers, were attached to it, and the novel spectacle attracted crowds of admiring spectators. Both anthracite and pine-knot coal were used as fuel, and the exhaust steam was discharged into the chimney, thus utilizing it to increase the draught.

The success of the model was such that, in the same year, Mr. Baldwin received an order for a locomotive from the Philadelphia, Germantown and Norristown Railroad Company, whose short line of six miles to Germantown was operated by horse-power. The Camden and Amboy Railroad Company had shortly before imported a locomotive from England, which was stored in a shed at Bordentown. It had not yet been put together; but Mr. Baldwin, in company with his friend, Mr. Peale, visited the spot, inspected the detached parts, and made a few memoranda of some of its principal dimensions. Guided by these figures and his experience with the Peale model, Mr. Baldwin commenced the task. The difficulties to be overcome in filling the order can hardly be appreciated at this day. There were few mechanics competent to do any part of the work on a locomotive. Suitable tools were with difficulty obtainable. Cylinders were bored by a chisel fixed in a block of wood and turned by hand. Blacksmiths able to weld a bar of iron exceeding one and one-quarter inches in thickness were few, or not to be had. It was necessary for Mr. Baldwin to do much of the work with his own hands, to educate the workmen who assisted him, and to improvise tools for the various processes.

The work was prosecuted, nevertheless, under all these difficulties, and the locomotive was fully completed, christened the "Old Ironsides," and tried on the road, November 23, 1832.

Digitized by Google

The circumstances of the trial are fully preserved, and are given, further on, in the extracts from the journals of the day. Despite some imperfections, naturally occurring in a first effort, and which were afterward to a great extent remedied, the engine was, for that early day, a marked and gratifying success. It was put at once into service, as appears from the Company's advertisement three days after the trial, and did duty on the Germantown road and others for over a score of years.

The "Ironsides" was a four-wheeled engine, modelled essentially on the English practice of that day, as shown in the "Planet" class, and weighed, in running order, something over five tons. The rear or driving-wheels were fifty-four inches in

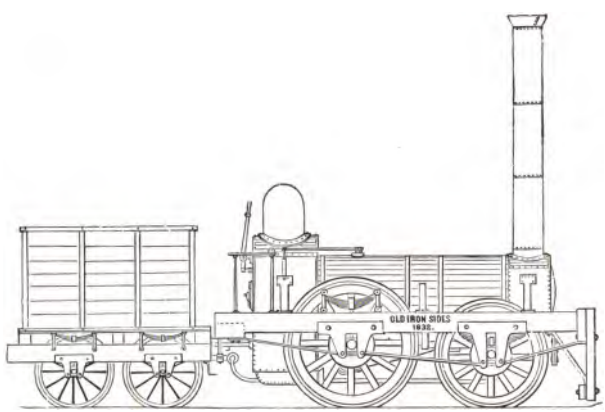

THE "OLD IRONSIDES," 1832.

diameter on a crank-axle placed in front of the fire-box. The cranks were thirty-nine inches from centre to centre. The front wheels, which were simply carrying wheels, were forty-five inches in diameter, on an axle placed just back of the cylinders. The cylinders were nine and one-half inches in diameter by eighteen inches stroke, and were attached horizontally to the outside of the smoke-box, which was D-shaped, with the sides receding inwardly, so as to bring the centre line of each cylinder in line with the centre of the crank. The wheels were made with heavy cast-iron hubs, wooden spokes and rims, and wrought-iron tires. The frame was of wood, placed outside the wheels. The boiler

Digitized by Google

was thirty inches in diameter, and contained seventy-two copper flues, one and one-half inches in diameter and seven feet long. The tender was a four-wheeled platform, with wooden sides and back, carrying an iron box for a water-tank, inclosed in a wooden casing, and with a space for fuel in front. The engine had no cab. The valve-motion was at first given by a single loose eccentric for each cylinder, placed on the axle between the crank and the hub of the wheel. On the inside of the eccentric was a half-circular slot, running half-way around. A stop was fastened to the axle at the arm of the crank, terminating in a pin which projected into the slot. The engine was reversed by changing the position of the eccentric on the axle by a lever operated from the footboard. This form of valve-motion was, however, shortly afterward changed, and a single fixed eccentric for each cylinder substituted. The rock-shafts, which were under the footboard, had arms above and below, and the eccentric-straps had each a forked rod, with a hook, or an upper and lower latch or pin, at their extremities, to engage with the upper or lower arm of the rock-shaft. The eccentric-rods were raised or lowered by a double treadle, so as to connect with the upper or lower arm of the rock-shaft, according as forward or backward gear was desired. A peculiarity in the exhaust of the "Ironsides" was that there was only a single straight pipe running across from one cylinder to the other, with an opening in the upper side of the pipe, midway between the cylinders, to which was attached at right angles the perpendicular pipe into the chimney. The cylinders, therefore, exhausted against each other; and it was found, after the engine had been put in use, that this was a serious objection. This defect was afterward remedied by turning each exhaust-pipe upward into the chimney, substantially as is now done. The steam-joints were made with canvas and red-lead, as was the practice in English locomotives, and in consequence much trouble was caused, from time to time, by leaking.

The price of the engine was to have been $4000, but some difficulty was found in procuring a settlement. The Company claimed that the engine did not perform according to contract; and objection was also made to some of the defects alluded to.

Digitized by Google

After these had been corrected as far as possible, however, Mr. Baldwin finally succeeded in effecting a compromise settlement, and received from the Company $3500 for the machine.

The results of the trial and the impression produced by it on the public mind may be gathered from the following extracts from the newspapers of the day:

The *United States Gazette* of November 24, 1832, remarks:

"A most gratifying experiment was made yesterday afternoon on the Philadelphia, Germantown and Norristown Railroad. The beautiful locomotive engine and tender, built by Mr. Baldwin, of this city, whose reputation as an ingenious machinist is well known, were for the first time placed on the road. The engine traveled about six miles, working with perfect accuracy and ease in all its parts, and with great velocity."

The *Chronicle* of the same date noticed the trial more at length, as follows:

"It gives us pleasure to state that the locomotive engine built by our townsman, M. W. Baldwin, has proved highly successful. In the presence of several gentlemen of science and information on such subjects, the engine was yesterday placed upon the road for the first time. All her parts had been previously highly finished and fitted together in Mr. Baldwin's factory. She was taken apart on Tuesday and removed to the Company's depot, and yesterday morning she was completely together, ready for travel. After the regular passenger cars had arrived from Germantown in the afternoon, the tracks being clear, preparation was made for her starting. The placing fire in the furnace and raising steam occupied twenty minutes. The engine (with her tender) moved from the depot in beautiful style, working with great ease and uniformity. She proceeded about half a mile beyond the Union Tavern, at the township line, and returned immediately, a distance of six miles, at a speed of about twenty-eight miles to the hour, her speed having been slackened at all the road crossings, and it being after dark, but a portion of her power was used. It is needless to say that the spectators were delighted. From this experiment there is every reason to believe this engine will draw thirty tons gross, at an average speed of forty miles an hour, on a level road. The principal superiority of the engine over any of the English ones known, consists in the light weight,—which is but between four and five tons,—her small bulk, and the simplicity of her working machinery. We rejoice at the result of this experiment, as it conclusively shows that Philadelphia, always famous for the skill of her mechanics, is enabled to produce steam-engines for railroads combining so many superior qualities as to warrant the belief that her mechanics will hereafter supply nearly all the public works of this description in the country."

On subsequent trials, the "Ironsides" attained a speed of thirty miles per hour, with its usual train attached. So great were the wonder and curiosity which attached to such a prodigy, that

Digitized by Google

people flocked to see the marvel, and eagerly bought the privilege of riding after the strange monster. The officers of the road were not slow to avail themselves of the public interest to increase their passenger receipts, and the following advertisement from *Poulson's American Daily Advertiser* of November 26, 1832, will show that as yet they regarded the new machine rather as a curiosity and a bait to allure travel than as a practical every-day servant:

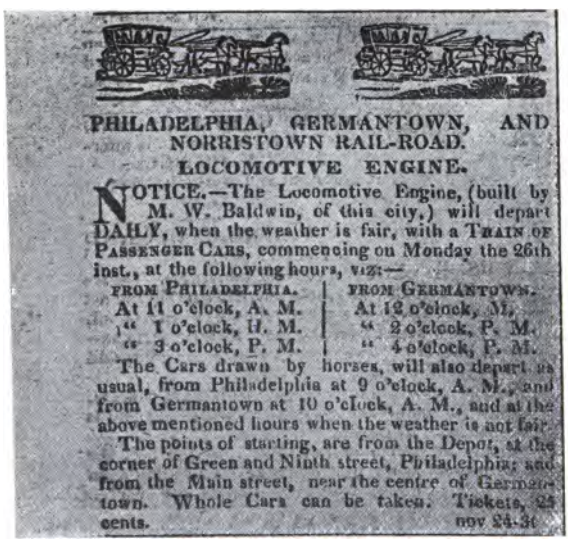

PHILADELPHIA, GERMANTOWN, AND NORRISTOWN RAIL-ROAD.

LOCOMOTIVE ENGINE.

NOTICE.—The Locomotive Engine, (built by M. W. Baldwin, of this city,) will depart DAILY, when the weather is fair, with a TRAIN OF PASSENGER CARS, commencing on Monday the 26th inst., at the following hours, viz:—

FROM PHILADELPHIA.	FROM GERMANTOWN.
At 11 o'clock, A. M.	At 12 o'clock, M.
" 1 o'clock, P. M.	" 2 o'clock, P. M.
" 3 o'clock, P. M.	" 4 o'clock, P. M.

The Cars drawn by horses, will also depart as usual, from Philadelphia at 9 o'clock, A. M., and from Germantown at 10 o'clock, A. M., and at the above mentioned hours when the weather is not fair.

The points of starting, are from the Depot, at the corner of Green and Ninth street, Philadelphia; and from the Main street, near the centre of Germantown. Whole Cars can be taken. Tickets, 25 cents.

nov 24-3t

This announcement did not mean that in wet weather horses *would be attached to the locomotive* to aid it in drawing the train, but that the usual horse cars would be employed in making the trips upon the road without the engine.

Upon making the first trip to Germantown with a passenger train with the "Ironsides," one of the drivers slipped upon the axle, causing the wheels to track less than the gauge of the road and drop in between the rails. It was also discovered that the valve arrangement of the pumps was defective, and they failed to supply the boiler with water. The shifting of the driving-wheel upon the axle fastened the eccentric, so that it would not operate in backward motion. These mishaps caused delay, and

Digitized by Google

prevented the engine from reaching its destination, to the great disappointment of all concerned. They were corrected in a few days, and the machine was used in experimenting upon its efficiency, making occasional trips with trains to Germantown. The road had an ascending grade, nearly uniform, of thirty-two feet per mile, and for the last half-mile of forty-five feet per mile, and it was found that the engine was too light for the business of the road upon these grades.

Such was Mr. Baldwin's first locomotive; and it is related of him that his discouragement at the difficulties which he had undergone in building it and in finally procuring a settlement for it was such that he remarked to one of his friends, with much decision, "That is our last locomotive."

It was some time before he received an order for another, but meanwhile the subject had become singularly fascinating to him, and occupied his mind so fully that he was eager to work out his new ideas in a tangible form.

Shortly after the "Ironsides" had been placed on the Germantown road, Mr. E. L. Miller, of Charleston, S. C., came to Philadelphia and made a careful examination of the machine. Mr. Miller had, in 1830, contracted to furnish a locomotive to the Charleston and Hamburg Railroad Company, and accordingly the engine "Best Friend" had been built under his direction at the West Point Foundry, New York. After inspecting the "Ironsides," he suggested to Mr. Baldwin to visit the Mohawk and Hudson Railroad and examine an English locomotive which had been placed on that road in July, 1831, by Messrs. Robert Stephenson & Co., of Newcastle, England. It was originally a four-wheeled engine of the "Planet" type, with horizontal cylinders and crank-axle. The front wheels of this engine were removed about a year after the machine was put at work, and a four-wheeled swiveling or "bogie" truck substituted. The result of Mr. Baldwin's investigations was the adoption of this design, but with some important improvements. Among these was the "half-crank," which he devised on his return from this

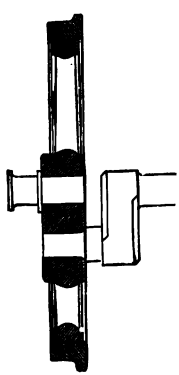

HALF-CRANK.

Digitized by Google

trip, and which he patented September 10, 1834. In this form of crank, the outer arm is omitted, and the wrist is fixed in a spoke of the wheel. In other words, the wheel itself formed one arm of the crank. The result sought and gained was that the cranks were strengthened, and, being at the extremities of the axle, the boiler could be made larger in diameter and placed lower. The driving-axle could also be placed back of the fire-box, the connecting-rods passing by the sides of the fire-box and taking hold inside of the wheels. This arrangement of the crank also involved the placing of the cylinders outside the smoke-box, as was done on the " Ironsides."

By the time the order for the second locomotive was received, Mr. Baldwin had matured this device and was prepared to embody it in practical form. The order came from Mr. E. L. Miller in behalf of the Charleston and Hamburg Railroad Company, and the engine bore his name, and was completed February 18, 1834. It was on six wheels; one pair being drivers, four and a half feet in diameter, with half-crank axle placed back of the fire-box as above described, and the four front wheels combined in a swiveling truck. The driving-wheels, it should be observed, were cast in solid bell-metal! The combined wood and iron wheels used on the " Ironsides" had proved objectionable, and Mr. Baldwin, in his endeavors to find a satisfactory substitute, had recourse to brass. June 29, 1833, he took out a patent for a cast-brass wheel, his idea being that by varying the hardness of the metal the adhesion of the drivers on the rails could be increased or diminished at will. The brass wheels on the " Miller," however, soon wore out, and the experiment with this metal was not repeated. The " E. L. Miller" had cylinders ten inches in diameter; stroke of piston, sixteen inches; and weighed, with water in the boiler, seven tons eight hundred-

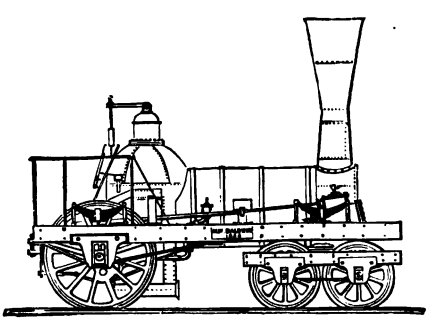

BALDWIN ENGINE, 1834.

Digitized by Google

weight. The boiler had a high dome over the fire-box; and this form of construction, it may be noted, was followed, with a few exceptions, for many years.

The valve-motion was given by a single fixed eccentric for each cylinder. Each eccentric-strap had two arms attached to it, one above and the other below, and, as the driving-axle was back of the fire-box, these arms were prolonged backward under the footboard, with a hook on the inner side of the end of each. The rock-shaft had arms above and below its axis, and the hooks of the two rods of each eccentric were moved by hand-levers so as to engage with either arm, thus producing backward or forward gear. This form of single eccentric, peculiar to Mr. Baldwin, was in the interest of simplicity in the working parts, and was adhered to for some years. It gave rise to an animated controversy among mechanics as to whether, with its use, it was possible to get a lead on the valve in both directions. Many maintained that this was impracticable; but Mr. Baldwin demonstrated by actual experience that the reverse was the case.

Meanwhile the Commonwealth of Pennsylvania had given Mr. Baldwin an order for a locomotive for the State Road, as it was then called, from Philadelphia to Columbia, which, up to that time, had been worked by horses. This engine, called the "Lancaster," was completed in June, 1834. It was similar to the "Miller," and weighed seventeen thousand pounds. After it was placed in service, the records show that it hauled at one time nineteen loaded burden cars over the highest grades between Philadelphia and Columbia. This was characterized at the time by the officers of the road as an "unprecedented performance." The success of the machine on its trial trips was such that the Legislature decided to adopt steam-power for working the road, and Mr. Baldwin received orders for several additional locomotives. Two others were accordingly delivered to the State in September and November respectively of that year, and one was also built and delivered to the Philadelphia and Trenton Railroad Company during the same season. This latter engine, which was put in service October 21, 1834, averaged twenty-one thousand miles per year to September 15, 1840.

Five locomotives were thus completed in 1834, and the new

Digitized by Google

business was fairly under way. The building in Lodge Alley, to which Mr. Baldwin had removed from Minor Street, and where these engines were constructed, began to be found too contracted, and another removal was decided upon. A location on Broad and Hamilton Streets (the site, in part, of the present works) was selected, and a three-story L-shaped brick building, fronting

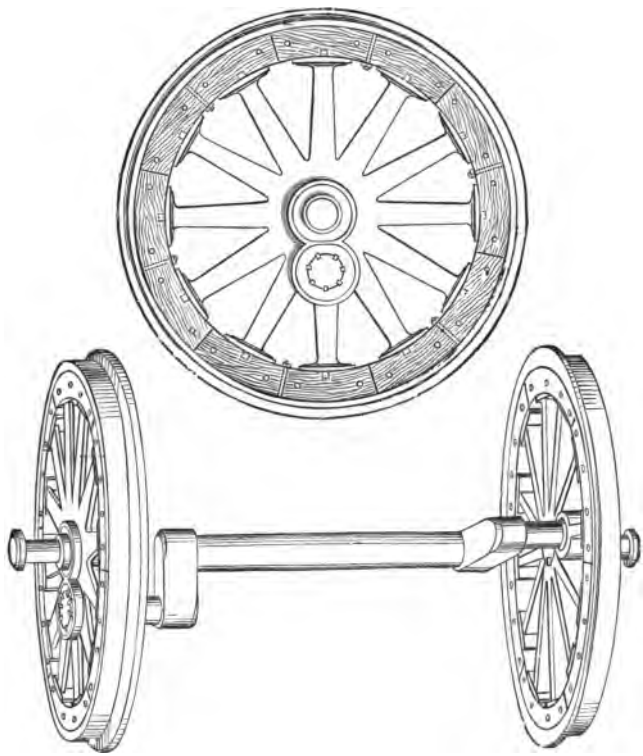

BALDWIN COMPOUND WOOD AND IRON WHEELS, 1834.

on both streets, erected. This was completed and the business removed to it during the following year (1835). The original building was partially destroyed by fire in 1884 and was replaced by a four-story brick structure.

These early locomotives, built in 1834, were the types of Mr. Baldwin's practice for some years. All, or nearly all of them,

Digitized by Google

embraced several important devices, which were the results of his study and experiments up to that time. The devices referred to were patented September 10, 1834, and the same patent covered the following four inventions, viz.:

1. The half-crank, and method of attaching it to the driving-wheel. (This has already been described.)

2. A new mode of constructing the wheels of locomotive engines and cars. In this the hub and spokes were of cast-iron, cast together. The spokes were cast without a rim, and terminated in segment flanges, each spoke having a separate flange disconnected from its neighbors. By this means, it was claimed, the injurious effect of the unequal expansion of the materials composing the wheels was lessened or altogether prevented. The flanges bore against wooden felloes, made in two thicknesses, and put together so as to break joints. Tenons or pins projected from the flanges into openings made in the wooden felloes, to keep them in place. Around the whole the tire was passed and secured by bolts. The sketch on page 17 shows the device.

3. A new mode of forming the joints of steam and other tubes. This was Mr. Baldwin's invention of ground joints for steam-pipes, which was a very valuable improvement over previous methods of making joints with red-lead packing, and which rendered it possible to carry a much higher pressure of steam.

4. A new mode of forming the joints and other parts of the supply-pump, and of locating the pump itself. This invention consisted in making the single guide-bar hollow and using it for the pump-barrel. The pump-plunger was attached to the piston-rod at a socket or sleeve formed for the purpose, and the hollow guide-bar terminated in the vertical pump-chamber. This chamber was made in two pieces, joined about midway between the induction and eduction pipes. This joint was ground steam-tight, as were also the joints of the induction-pipe with the bottom of the lower chamber, and the flange of the eduction-pipe with the top of the upper chamber. All these parts were held together by a stirrup with a set-screw in its arched top, and the arrangement was such that by simply unscrewing this set-screw the

Digitized by Google

different sections of the chamber, with all the valves, could be taken apart for cleaning or adjusting. The cut below illustrates the device.

It is probable that the five engines built during 1834 embodied all, or nearly all, these devices. They all had the half-crank, the ground joints for steam-pipes (which were first made by him in 1833), and the pump formed in the guide-bar, and all had the four-wheeled truck in front, and a single pair of drivers back of the fire-box. On this position of the driving-wheels Mr. Baldwin laid great stress, as it made a more even distribution of the

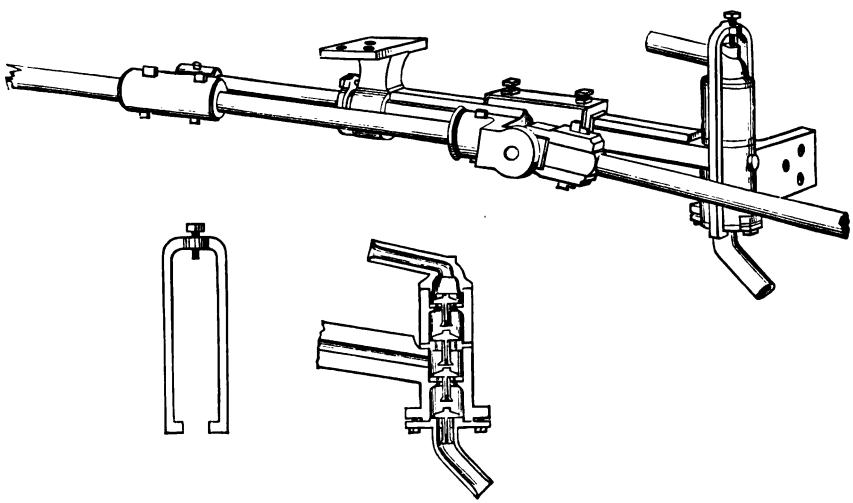

PUMP AND STIRRUP.

weight, throwing about one-half on the drivers and one-half on the four-wheeled truck. It also extended the wheel-base, making the engine much steadier and less damaging to the track. Mr. William Norris, who had established a locomotive works in Philadelphia in 1832, was at this time building a six-wheeled engine with a truck in front and the driving-wheels placed in front of the fire-box. Considerable rivalry naturally existed between the two manufacturers as to the comparative merits of their respective plans. In Mr. Norris's engine, the position of the driving-axle in front of the fire-box threw on it more of the

Digitized by Google

weight of the engine, and thus increased the adhesion and the tractive power. Mr. Baldwin, however, maintained the superiority of his plan, as giving a better distribution of the weight and a longer wheel-base, and consequently rendering the machine less destructive to the track. As the iron rails then in use were generally light, and much of the track was of wood, this feature was of some importance.

To the use of the ground joint for steam-pipes, however, much of the success of his early engines was due. The English builders were making locomotives with canvas and red-lead joints, permitting a steam pressure of only sixty pounds per inch to be carried, while Mr. Baldwin's machines were worked at one hundred and twenty pounds with ease. Several locomotives imported from England at about this period by the Commonwealth of Pennsylvania for the State Road (three of which were made by Stephenson) had canvas and red-lead joints, and their efficiency was so much less than that of the Baldwin engines, on account of this and other features of construction, that they were soon laid aside or sold.

In June, 1834, a patent was issued to Mr. E. L. Miller, by whom Mr. Baldwin's second engine was ordered, for a method of increasing the adhesion of a locomotive by throwing a part of the weight of the tender on the rear of the engine, thus increasing the weight on the drivers. Mr. Baldwin adopted this device on an engine built for the Philadelphia and Trenton Railroad Company, May, 1835, and thereafter used it largely, paying one hundred dollars royalty for each engine. Eventually (May 6, 1839) he bought the patent for nine thousand dollars, evidently considering that the device was especially valuable, if not indispensable, in order to render his engine as powerful, when required, as other patterns having the driving-wheels in front of the fire-box, and therefore utilizing more of the weight of the engine for adhesion.

In making the truck and tender-wheels of these early locomotives, the hubs were cast in three pieces and afterward banded with wrought-iron, the interstices being filled with spelter. This method of construction was adopted on account of the difficulty then found in casting a chilled wheel in one solid piece.

Digitized by Google

Early in 1835, the new shop on Broad Street was completed and occupied. Mr. Baldwin's attention was thenceforward given to locomotive building exclusively, except that a stationary engine was occasionally constructed.

In May, 1835, his eleventh locomotive, the "Black Hawk," was delivered to the Philadelphia and Trenton Railroad Company. This was the first outside-connected engine of his build. It was also the first engine on which the Miller device of attaching part of the weight of the tender to the engine was employed. On the eighteenth engine, the "Brandywine," built for the Philadelphia and Columbia Railroad Company, brass tires were used on the driving-wheels, for the purpose of obtaining more adhesion; but they wore out rapidly and were replaced with iron.

April 3, 1835, Mr. Baldwin took out a patent for certain improvements in the wheels and tubes of locomotive engines. That relating to the wheels provided for casting the hub and spokes together, and having the spokes terminate in segments of a rim, as described in his patent of September 10, 1834. Between the ends of the spokes and the tires wood was interposed, and the tire might be either of wrought-iron or of chilled cast-iron. The intention was expressed of making the tire usually of cast-iron chilled. The main object, however, was declared to be the interposition between the spokes and the rim of a layer of wood or other substance possessing some degree of elasticity. This method of making driving-wheels was followed for several years, the tires being made with a shoulder. See illustration on page 22.

The improvement in locomotive tubes consisted in driving a copper ferrule or thimble on the outside of the end of the tube, and soldering it in place, instead of driving a ferrule into the tube, as had previously been the practice. The object of the latter method had been to make a tight joint with the tube-sheet; but by putting the ferrule on the outside of the tube, not only was the joint made as tight as before, but the tube was strengthened, and left unobstructed throughout to the full extent of its diameter. This method of setting flues has been generally followed in the works from that date to the present, the only difference being that, at this time, with iron tubes, the end is

Digitized by Google

swedged down, the copper ferrule brazed on, and the iron end turned or riveted over against the copper thimble and the flue-sheet, to make the joint perfect.

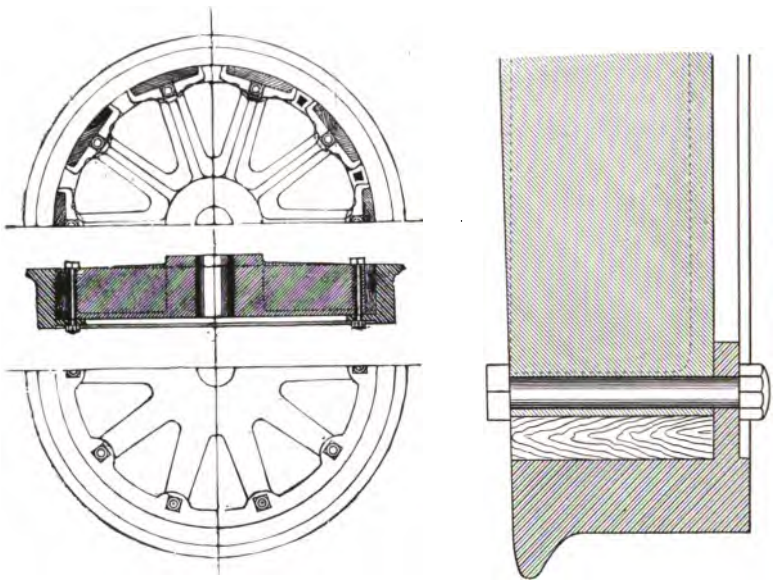

DRIVING-WHEELS, PATENTED SEPTEMBER, 1834.

Fourteen engines were constructed in 1835; forty in 1836; forty in 1837; twenty-three in 1838; twenty-six in 1839; and nine in 1840. During all these years the general design continued the same; but, in compliance with the demand for more power, three sizes were furnished, as follows:

First class.	Cylinders,	$12\frac{1}{2} \times 16$;	weight,	loaded,	26,000 pounds.
Second class.	"	12×16;	"	"	23,000 "
Third class.	"	$10\frac{1}{2} \times 16$;	"	"	20,000 "

The first-class engine he fully believed, in 1838, was as heavy as would be called for, and he declared that it was as large as he intended to make. Most of the engines were built with the half-crank, but occasionally an outside-connected machine was turned out. These latter, however, failed to give as complete satisfaction as the half-crank machine. The drivers were generally four and a half feet in diameter.

Digitized by Google

A patent was issued to Mr. Baldwin, August 17, 1835, for his device of cylindrical pedestals. In this method of construction, the pedestal was of cast-iron, and was bored in a lathe so as to form two concave jaws. The boxes were also turned in a lathe so that their vertical ends were cylindrical, and they were thus fitted in the pedestals. This method of fitting up pedestals and boxes was cheap and effective, and was used for some years for the driving and tender wheels.

As showing the estimation in which these early engines were held, it may not be out of place to refer to the opinions of some of the railroad managers of that period.

Mr. L. A. Sykes, engineer of the New Jersey Transportation Company, under date of June 12, 1838, wrote that he could draw with his engines twenty four-wheeled cars with twenty-six passengers each, at a speed of twenty to twenty-five miles per hour, over grades of twenty-six feet per mile. "As to simplicity of construction," he adds, "small liability to get out of order, economy of repairs, and ease to the road, I fully believe Mr. Baldwin's engines stand unrivaled. I consider the simplicity of the engine, the arrangement of the working parts, and the distribution of the weight, far superior to any engine I have ever seen, either of American or English manufacture, and I have not the least hesitation in saying that Mr. Baldwin's engine will do the same amount of work with much less repairs, either to the engine or the track, than any other engine in use."

L. G. Cannon, President of the Rensselaer and Saratoga Railroad Company, writes: "Your engines will, in performance and cost of repairs, bear comparison with any other engine made in this or any other country."

Some of Mr. Baldwin's engines on the State Road, in 1837, cost, for repairs, only from one and two-tenths to one and six-tenths cents per mile. It is noted that the engine "West Chester," on the same road, weighing twenty thousand seven hundred and thirty-five pounds (ten thousand four hundred and seventy-five on drivers), drew fifty-one cars (four-wheeled), weighing two hundred and eighty-nine net tons, over the road, some of the track being of wood covered with strap-rail.

The financial difficulties of 1836 and 1837, which brought

Digitized by Google

ruin upon so many, did not leave Mr. Baldwin unscathed. His embarrassments became so great that he was unable to proceed, and was forced to call his creditors together for a settlement. After offering to surrender all his property, his shop, tools, house, and everything, if they so desired,—all of which would realize only about twenty-five per cent. of their claims,—he proposed to them that they should permit him to go on with the business, and in three years he would pay the full amount of all claims, principal and interest. This was finally acceded to, and the promise was in effect fulfilled, although not without an extension of two years beyond the time originally proposed.

In May, 1837, the number of hands employed was three hundred, but this number was reducing weekly, owing to the falling off in the demand for engines.

These financial troubles had their effect on the demand for locomotives, as will be seen in the decrease in the number built in 1838, 1839, and 1840; and this result was furthered by the establishment of several other locomotive works and the introduction of other patterns of engines.

The changes and improvements in details made during these years may be summed up as follows:

The subject of burning anthracite coal had engaged much attention. In October, 1836, Mr. Baldwin secured a patent for a grate or fireplace which could be detached from the engine at pleasure, and a new one with a fresh coal fire substituted. The intention was to have the grate with freshly ignited coal all ready for the engine on its arrival at a station, and placed between the rails over suitable levers, by which it could be attached quickly to the fire-box. It is needless to say that this was never practised. In January, 1838, however, Mr. Baldwin was experimenting with the consumption of coal on the Germantown road, and in July of the same year the records show that he was making a locomotive to burn coal, part of the arrangement being to blow the fire with a fan.

Up to 1838, Mr. Baldwin had made both driving and truck wheels with wrought tires, but during that year chilled wheels for engine and tender trucks were adopted. His tires were furnished by Messrs. S. Vail & Son, Morristown, N. J., who

Digitized by Google

made the only tires then obtainable in America. They were very thin, being only one inch to one and a half inches thick; and Mr. Baldwin, in importing some tires from England at that time, insisted on their being made double the ordinary thickness. The manufacturers at first objected and ridiculed the idea, the practice being to use two tires when extra thickness was wanted, but finally they consented to meet his requirements.

All his engines thus far had the single eccentric for each valve, but at about this period double eccentrics were adopted, each terminating in a straight hook, and reversed by hand-levers.

At this early period, Mr. Baldwin had begun to feel the necessity of making all like parts of locomotives of the same class in such manner as to be absolutely interchangeable. Steps were taken in this direction, but it was not until many years afterward that the system of standard gauges was perfected, which has since grown to be a distinguishing feature in the establishment.

In March, 1839, Mr. Baldwin's records show that he was building a number of outside-connected engines, and had succeeded in making them strong and durable. He was also making a new chilled wheel, and one which he thought would not break.

On the one hundred and thirty-sixth locomotive, completed October 18, 1839, for the Philadelphia, Germantown and Norristown Railroad, the old pattern of wooden frame was abandoned, and no outside frame whatever was employed,—the machinery, as well as the truck and the pedestals of the driving-axles, being attached directly to the naked boiler. The wooden frame thenceforward disappeared gradually, and an iron frame took its place. Another innovation was the adoption of eight-wheeled tenders, the first of which was built at about this period.

April 8, 1839, Mr. Baldwin associated with himself Messrs. Vail & Hufty, and the business was conducted under the firm name of Baldwin, Vail & Hufty until 1841, when Mr. Hufty withdrew, and Baldwin & Vail continued the copartnership until 1842.

The time had now arrived when the increase of business on railroads demanded more powerful locomotives. It had for some years been felt that for freight traffic the engine with one pair of

Digitized by Google

drivers was insufficient. Mr. Baldwin's engine had the single pair of drivers placed back of the fire-box; that made by Mr. Norris, one pair in front of the fire-box. An engine with two pairs of drivers, one pair in front and one pair behind the fire-box, was the next logical step, and Mr. Henry R. Campbell, of Philadelphia, was the first to carry this design into execution. Mr. Campbell, as has been noted, was the Chief Engineer of the Germantown Railroad when the "Ironsides" was placed on that line, and had since given much attention to the subject of locomotive construction. February 5, 1836, Mr. Campbell secured a patent for an eight-wheeled engine with four drivers connected, and a four-wheeled truck in front; and subsequently contracted with James Brooks, of Philadelphia, to build for him such a machine. The work was begun March 16, 1836, and the engine was completed May 8, 1837. This was the first eight-wheeled engine of this type, and from it the standard American locomotive of to-day takes its origin. The engine lacked, however, one essential feature; there were no equalizing beams between the drivers, and nothing but the ordinary steel springs over each journal of the driving-axles to equalize the weight upon them. It remained for Messrs. Eastwick & Harrison to supply this deficiency; and in 1837 that firm constructed at their shop in Philadelphia a locomotive on this plan, but with the driving-axles running in a separate square frame, connected to the main frame above it by a single central bearing on each side. This engine had cylinders twelve by eighteen, four coupled driving-wheels, forty-four inches in diameter, carrying eight of the twelve tons constituting the total weight. Subsequently, Mr. Joseph Harrison, Jr., of the same firm, substituted "equalizing beams" on engines of this plan afterward constructed by them, substantially in the same manner as since generally employed.

In the *American Railroad Journal* of July 30, 1836, a woodcut showing Mr. Campbell's engine, together with an elaborate calculation of the effective power of an engine on this plan, by William J. Lewis, Esq., Civil Engineer, was published, with a table showing its performance upon grades ranging from a dead level to a rise of one hundred feet per mile. Mr. Campbell stated that his experience at that time (1835–36) convinced him

Digitized by Google

that grades of one hundred feet rise per mile would, if roads were judiciously located, carry railroads over any of the mountain passes in America, without the use of planes with stationary steam power, or, as a general rule, of costly tunnels,—an opinion very extensively verified by the experience of the country since that date.

A step had thus been taken toward a plan of locomotive having more adhesive power. Mr. Baldwin, however, was slow to adopt the new design. He naturally regarded innovations with distrust. He had done much to perfect the old pattern of engine, and had built over a hundred of them, which were in successful operation on various railroads. Many of the details were the subjects of his several patents, and had been greatly simplified in his practice. In fact, simplicity in all the working parts had been so largely his aim, that it was natural that he should distrust any plan involving additional machinery, and he regarded the new design as only an experiment at best. In November, 1838, he wrote to a correspondent that he did not think there was any advantage in the eight-wheeled engine. There being three points in contact, it could not turn a curve, he argued, without slipping one or the other pair of wheels sideways. Another objection was in the multiplicity of machinery and the difficulty in maintaining four driving-wheels all of exactly the same size. Some means, however, of getting more adhesion must be had, and the result of his reflections upon this subject was the project of a "geared engine." In August, 1839, he took steps to secure a patent for such a machine, and December 31, 1840, letters patent were granted him for the device. In this engine, an independent shaft or axle was placed between the two axles of the truck, and connected by cranks and coupling-rods with cranks on the outside of the driving-wheels. This shaft had a central cog-wheel engaging on each side with intermediate cog-wheels, which in turn geared into cog-wheels on each truck-axle. The intermediate cog-wheels had wide teeth, so that the truck could pivot while the main shaft remained parallel with the driving-axle. The diameters of the cog-wheels were, of course, in such proportion to the driving- and truck-wheels that the latter should revolve as

Digitized by Google

much oftener than the drivers as their smaller size might require. Of the success of this machine for freight service, Mr. Baldwin was very sanguine. One was put in hand at once, completed in August, 1841, and eventually sold to the Sugarloaf Coal Company. It was an outside-connected engine, weighing thirty thousand pounds, of which eleven thousand seven hundred and seventy-five pounds were on the drivers, and eighteen thousand three hundred and thirty-five on the truck. The driving-wheels were forty-four and the truck-wheels thirty-three inches in diameter. The cylinders were thirteen inches in diameter by sixteen inches stroke. On a trial of the engine upon the Philadelphia and Reading Railroad, it hauled five hundred and ninety tons from Reading to Philadelphia—a distance of fifty-four miles—in five hours and twenty-two minutes. The Superintendent of the road, in writing of the trial, remarked that this train was unprecedented in length and weight both in America and Europe. The performance was noticed in favorable terms by the Philadelphia newspapers, and was made the subject of a report by the Committee on Science and Arts of the Franklin Institute, who strongly recommended this plan of engine for freight service. The success of the trial led Mr. Baldwin at first to believe that the geared engine would be generally adopted for freight traffic; but in this he was disappointed. No farther demand was made for such machines, and no more of them were built.

In 1840, Mr. Baldwin received an order, through August Belmont, Esq., of New York, for a locomotive for Austria, and had nearly completed one which was calculated to do the work required, when he learned that only sixty pounds pressure of steam was admissible, whereas his engine was designed to use steam at one hundred pounds and over. He accordingly constructed another, meeting this requirement, and shipped it in the following year. This engine, it may be noted, had a kind of link-motion, agreeably to the specification received, and was the first of his make upon which the link was introduced.

Mr. Baldwin's patent of December 31, 1840, already referred to as covering his geared engine, embraced several other devices, as follows:

1. A method of operating a fan, or blowing-wheel, for the

Digitized by Google

purpose of blowing the fire. The fan was to be placed under the footboard, and driven by the friction of a grooved pulley in contact with the flange of the driving-wheel.

2. The substitution of a metallic stuffing, consisting of wire, for the hemp, wool or other material which had been employed in stuffing-boxes.

3. The placing of the springs of the engine truck so as to obviate the evil of the locking of the wheels when the truck-frame vibrates from the centre-pin vertically. Spiral as well as semi-elliptic springs, placed at each end of the truck-frame, were specified. The spiral spring is described as received in two cups, —one above and one below. The cups were connected together at their centres, by a pin upon one and a socket in the other, so that the cups could approach toward or recede from each other and still preserve their parallelism.

4. An improvement in the manner of constructing the iron frames of locomotives, by making the pedestals in one piece with, and constituting part of, the frames.

5. The employment of spiral springs in connection with cylindrical pedestals and boxes. A single spiral was at first used, but not proving sufficiently strong, a combination or nest of spirals curving alternately in opposite directions was afterward employed. Each spiral had its bearing in a spiral recess in the pedestal.

In the specification of this patent a change in the method of making cylindrical pedestals and boxes is noted. Instead of boring and turning them in a lathe, they were cast to the required shape in chills. This method of construction was used for a time, but eventually a return was made to the original plan, as giving a more accurate job.

In 1842, Mr. Baldwin constructed, under an arrangement with Mr. Ross Winans, three locomotives for the Western Railroad of Massachusetts, on a plan which had been designed by that gentleman for freight traffic. These machines had upright boilers, and horizontal cylinders which worked cranks on a shaft bearing cog-wheels engaging with other cog-wheels on an intermediate shaft. This latter shaft had cranks coupled to four driving-wheels on each side. These engines were constructed

Digitized by Google

to burn anthracite coal. Their peculiarly uncouth appearance earned for them the name of "crabs," and they were but short lived in service.

But to return to the progress of Mr. Baldwin's locomotive practice. The geared engine had not proved a success. It was unsatisfactory, as well to its designer as to the railroad com-

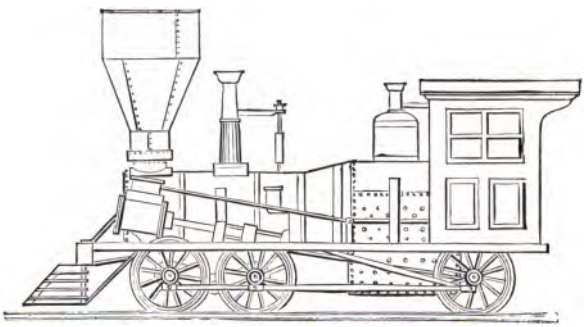

BALDWIN SIX-WHEELS-CONNECTED ENGINE, 1842.

munity. The problem of utilizing more or all of the weight of the engine for adhesion remained, in Mr. Baldwin's view, yet to be solved. The plan of coupling four or six wheels had long

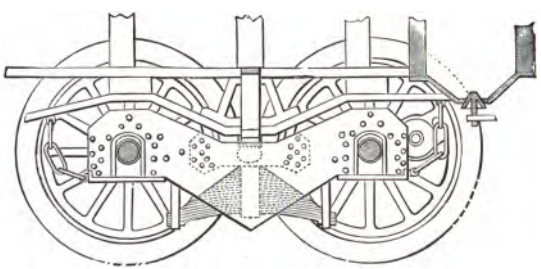

BALDWIN FLEXIBLE-BEAM TRUCK, 1842.—ELEVATION.

before been adopted in England, but on the short curves prevalent on American railroads he felt that something more was necessary. The wheels must not only be coupled, but at the same time must be free to adapt themselves to a curve. These two conditions were apparently incompatible, and to reconcile these inconsistencies was the task which Mr. Baldwin set himself to accomplish. He undertook it, too, at a time when his business had

Digitized by Google

fallen off greatly and he was involved in the most serious financial embarrassments. The problem was constantly before him, and at length, during a sleepless night, its solution flashed across his mind. The plan so long sought for, and which, subsequently,

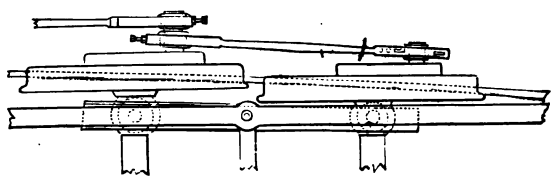

HALF PLAN.

more than any other of his improvements or inventions, contributed to the foundation of his fortune, was his well-known six-wheels-connected locomotive with the four front drivers combined in a flexible truck. For this machine Mr. Baldwin secured a patent, August 25, 1842. Its principal characteristic features are now matters of history, but they deserve here a brief mention. The engine was on six wheels, all connected as drivers. The rear wheels were placed rigidly in the frames, usually behind the fire-box, with inside bearings. The cylinders were inclined, and with outside connections. The four remaining wheels had inside journals running in boxes held by two wide and deep wrought-iron beams, one on each side. These beams were unconnected, and entirely independent of each other. The pedestals formed in them were bored out cylindrically, and into them cylindrical boxes, as patented by him in 1835, were fitted. The engine frame on each side was directly over the beam, and a spherical pin, running down from the frame, bore in a socket in the beam midway between the two axles. It will thus be seen that each side-beam independently could turn horizontally or vertically under the spherical pin, and the cylindrical boxes could also turn in the pedestals. Hence, in passing a curve, the middle pair of drivers could move laterally in one direction—say to the right—while the front pair could move in the opposite direction, or to the left; the two axles all the while remaining parallel to each other and to the rear driving-axle. The operation of these beams was, therefore, like that of the parallel-ruler. On a straight line the

Digitized by Google

two beams and the two axles formed a rectangle; on curves, a parallelogram, the angles varying with the degree of curvature. The coupling-rods were made with cylindrical brasses, thus forming ball-and-socket joints, to enable them to accommodate themselves to the lateral movements of the wheels. Colburn, in his "Locomotive Engineering," remarks of this arrangement of rods as follows:

"Geometrically, no doubt, this combination of wheels could only work properly around curves by a lengthening and shortening of the rods which served to couple the principal pair of driving-wheels with the hind truck-wheels. But if the coupling-rods from the principal pair of driving-wheels be five feet long, and if the beams of the truck-frame be four feet long (the radius of curve described by the axle-boxes around the spherical side bearings being two feet), then the total corresponding lengthening of the coupling-rods, in order to allow the hind truck-wheels to move one inch to one side, and the front wheels of the truck one inch to the other side, of their normal position on a straight line, would be $\sqrt{60^2 + 1^2} - 60 + 24 - \sqrt{24^2 - 1^2} = 0.0275$ inch, or less than one thirty-second of an inch. And if only one pair of driving wheels were thus coupled with a four-wheeled truck, the total wheel-base being nine feet, the motion permitted by this slight elongation of the coupling-rods (an elongation provided for by a trifling slackness in the brasses) would enable three pairs of wheels to stand without binding in a curve of only one hundred feet radius."

The first engine of the new plan was finished early in December, 1842, being one of fourteen engines constructed in that year, and was sent to the Georgia Railroad, on the order of Mr. J. Edgar Thomson, then Chief Engineer and Superintendent of that line. It weighed twelve tons, and drew, besides its own weight, two hundred and fifty tons up a grade of thirty-six feet to the mile.

Other orders soon followed. The new machine was received generally with great favor. The loads hauled by it exceeded anything so far known in American railroad practice, and sagacious managers hailed it as a means of largely reducing operating expenses. On the Central Railroad of Georgia, one of these twelve-ton engines drew nineteen eight-wheeled cars, with seven hundred and fifty bales of cotton, each bale weighing four hundred and fifty pounds, over maximum grades of thirty feet per mile, and the manager of the road declared that it could readily take one thousand bales. On the Philadelphia and Reading Railroad a similar engine of eighteen tons weight drew one hundred and

Digitized by Google

fifty loaded cars (total weight of cars and lading, one thousand one hundred and thirty tons) from Schuylkill Haven to Philadelphia, at a speed of seven miles per hour. The regular load was one hundred loaded cars, which were hauled at a speed of from twelve to fifteen miles per hour on a level.

The following extract from a letter, dated August 10, 1844, of Mr. G. A. Nicolls, then superintendent of that line, gives the particulars of the performance of these machines, and shows the estimation in which they were held:

"We have had two of these engines in operation for about four weeks. Each engine weighs about forty thousand pounds with water and fuel, equally distributed on six wheels, all of which are coupled, thus gaining the whole adhesion of the engine's weight. Their cylinders are fifteen by eighteen inches.

"The daily allotted load of each of these engines is one hundred coal cars, each loaded with three and six-tenths tons of coal, and weighing two and fifteen one-hundredths tons each, empty; making a net weight of three hundred and sixty tons of coal carried, and a gross weight of train of five hundred and seventy-five tons, all of two thousand two hundred and forty pounds.

"This train is hauled over the ninety-four miles of the road, half of which is level, at the rate of twelve miles per hour; and with it the engine is able to make fourteen to fifteen miles per hour on a level.

"Were all the cars on the road of sufficient strength, and making the trip by daylight, nearly one-half being now performed at night, I have no doubt of these engines being quite equal to a load of eight hundred tons gross, as their average daily performance on any of the levels of our road, some of which are eight miles long.

"In strength of make, quality of workmanship, finish, and proportion of parts, I consider them equal to any, and superior to most, freight engines I have seen. They are remarkably easy on the rail, either in their vertical or horizontal action, from the equalization of their weight, and the improved truck under the forward part of the engine. This latter adapts itself to all the curves of the road, including some of seven hundred and sixteen feet radius in the main track, and moves with great ease around our turning Y curves at Richmond, of about three hundred feet radius.

"I consider these engines as near perfection, in the arrangement of their parts, and their general efficiency, as the present improvements in machinery and the locomotive engine will admit of. They are saving us thirty per cent. in every trip on the former cost of motive or engine power."

But the flexible-beam truck also enabled Mr. Baldwin to meet the demand for an engine with four drivers connected. Other builders were making engines with four drivers and a four-wheeled truck, of the present American standard type. To compete with this design, Mr. Baldwin modified his six-wheels-

Digitized by Google

connected engine by connecting only two out of the three pairs of wheels as drivers, making the forward wheels of smaller diameter as leading wheels, but combining them with the front drivers in a flexible-beam truck. The first engine on this plan was sent to the Erie and Kalamazoo Railroad, in October, 1843, and gave great satisfaction. The superintendent of the road was enthusiastic in its praise, and wrote to Mr. Baldwin that he doubted "if anything could be got up which would answer the business of the road so well." One was also sent to the Utica and Schenectady Railroad a few weeks later, of which the superintendent remarked that "it worked beautifully, and there were not wagons enough to give it a full load." In this plan the leading wheels were usually made thirty-six and the drivers fifty-four inches in diameter.

This machine of course came in competition with the eight-wheeled engine having four drivers, and Mr. Baldwin claimed for his plan a decided superiority. In each case about two-thirds of the total weight was carried on the four drivers, and Mr. Baldwin maintained that his engine, having only six instead of eight wheels, was simpler and more effective.

At about this period Mr. Baldwin's attention was called by Mr. Levi Bissell to an "Air-Spring" which the latter had devised, and which it was imagined was destined to be a cheap, effective, and perpetual spring. The device consisted of a small cylinder placed above the frame over the axle-box, and having a piston fitted air-tight into it. The piston-rod was to bear on the axle-box, and the proper quantity of air was to be pumped into the cylinder above the piston, and the cylinder then hermetically closed. The piston had a leather packing which was to be kept moist by some fluid (molasses was proposed) previously introduced into the cylinder. Mr. Baldwin at first proposed to equalize the weight between two pairs of drivers by connecting two air-springs on each side by a pipe, the use of an equalizing beam being covered by Messrs. Eastwick & Harrison's patent. The air-springs were found, however, not to work practically, and were never applied. It may be added that a model of an equalizing air-spring was exhibited by Mr. Joseph Harrison, Jr., at the Franklin Institute, in 1838 or 1839.

Digitized by Google

With the introduction of the new machine, business began at once to revive, and the tide of prosperity turned once more in Mr. Baldwin's favor. Twelve engines were constructed in 1843, all but four of them of the new pattern; twenty-two engines in 1844, all of the new pattern; and twenty-seven in 1845. Three of this number were of the old type, with one pair of drivers, but from that time forward the old pattern with the single pair of drivers disappeared from the practice of the establishment, save occasionally for exceptional purposes.

In 1842, the partnership with Mr. Vail was dissolved, and Mr. Asa Whitney, who had been superintendent of the Mohawk and Hudson Railroad, became a partner with Mr. Baldwin, and the firm continued as Baldwin & Whitney until 1846, when the latter withdrew to engage in the manufacture of car-wheels, establishing the firm of A. Whitney & Sons, Philadelphia.

Mr. Whitney brought to the firm a railroad experience and thorough business talent. He introduced a system in many details of the management of the business, which Mr. Baldwin, whose mind was devoted more exclusively to mechanical subjects, had failed to establish or wholly ignored. The method at present in use in the establishment, of giving to each class of locomotives a distinctive designation, composed of a number and a letter, originated very shortly after Mr. Whitney's connection with the business. For the purpose of representing the different designs, sheets with engravings of locomotives were employed. The sheet showing the engine with one pair of drivers was marked B; that with two pairs, C; that with three, D; and that with four, E. Taking its rise from this circumstance, it became customary to designate as B engines those with one pair of drivers; as C engines, those with two pairs; as D engines, those with three pairs; and as E engines, those with four pairs. Shortly afterward, a number, indicating the weight in gross tons, was added. Thus, the 12 D engine was one with three pairs of drivers, and weighing twelve tons; the 12 C, an engine of same weight, but with only four wheels connected. A modification of this method of designating the several plans and sizes is still in use, and is explained elsewhere.

It will be observed that the classification as thus established

Digitized by Google

began with the B engines. The letter A was reserved for an engine intended to run at very high speeds, and so designed that the driving-wheels should make two revolutions for each reciprocation of the pistons. This was to be accomplished by means of gearing. The general plan of the engine was determined in Mr. Baldwin's mind, but was never carried into execution.

The adoption of the plan of six-wheels-connected engines opened the way at once to increasing their size. The weight being almost evenly distributed on six points, heavier machines were admissible, the weight on any one pair of drivers being little, if any, greater than had been the practice with the old plan of engine having a single pair of drivers. Hence engines of eighteen and twenty tons weight were shortly introduced, and in 1844 three of twenty tons weight, with cylinders sixteen and one-half inches diameter by eighteen inches stroke, were constructed for the Western Railroad of Massachusetts, and six of eighteen tons weight, with cylinders fifteen by eighteen, and drivers forty-six inches in diameter, were built for the Philadelphia and Reading Railroad. It should be noted that three of these latter engines had iron flues. This was the first instance in which Mr. Baldwin had employed tubes of this material, although they had been previously used by others. Lap-welded iron flues were made by Morris, Tasker & Co., of Philadelphia, about 1838, and but-welded iron tubes had previously been made by the same firm. Ross Winans, of Baltimore, had also made iron tubes by hand for locomotives of his manufacture before 1838. The advantage found to result from the use of iron tubes, apart from their less cost, was that the tubes and boiler-shell, being of the same material, expanded and contracted alike, while in the case of copper tubes the expansion of the metal by heat varied from that of the boiler-shell, and as a consequence there was greater liability to leakage at the joints with the tube-sheets. The opinion prevailed largely at that time that some advantage resulted in the evaporation of water, owing to the superiority of copper as a conductor of heat. To determine this question, an experiment was tried with two of the six engines referred to above, one of which, the "Ontario," had copper flues, and another, the "New England," iron flues. In other respects they

Digitized by Google

were precisely alike. The two engines were run from Richmond to Mount Carbon, August 27, 1844, each drawing a train of one hundred and one empty cars, and, returning, from Mount Carbon to Richmond, on the following day, each with one hundred loaded cars. The quantity of water evaporated and wood consumed was noted, with the result shown in the following table:

	Up Trip, Aug. 27, 1844.		Down Trip, Aug. 28, 1844.	
	"Ontario." (Copper Flues.)	"New England." (Iron Flues.)	"Ontario." (Copper Flues.)	"New England." (Iron Flues.)
Time, running	9h. 7m.	7h. 41m.	10h. 44m.	8h. 19m.
" standing at stations . .	4h. 2m.	3h. 7m.	2h. 12m.	3h. 8m.
Cords of wood burned . . .	6.68	5.50	6.94	6.
Cubic feet of water evaporated	925.75	757.26	837.46	656.39
Ratio, cubic feet of water to a cord of wood	138.57	137.68	120.67	109.39

The conditions of the experiments not being absolutely the same in each case, the results could not of course be accepted as entirely accurate. They seemed to show, however, no considerable difference in the evaporative efficacy of copper and iron tubes.

The period under consideration was marked also by the introduction of the French & Baird stack, which proved at once to be one of the most successful spark-arresters thus far employed, and which was for years used almost exclusively wherever, as on the cotton-carrying railroads of the South, a thoroughly effective spark-arrester was required. This stack was introduced by Mr. Baird, then a foreman in the works, who purchased the patent-right of what had been known as the Grimes stack, and combined with it some of the features of the stack made by Mr. Richard French, then Master Mechanic of the Germantown Railroad, together with certain improvements of his own. The cone over the straight inside pipe was made with volute flanges on its under side, which gave a rotary motion to the sparks. Around the cone was a casing about six inches smaller in diameter than the outside stack. Apertures were cut in the

Digitized by Google

sides of this casing, through which the sparks in their rotary motion were discharged, and thus fell to the bottom of the space between the straight inside pipe and the outside stack. The opening in the top of the stack was fitted with a series of V-shaped iron circles perforated with numerous holes, thus presenting an enlarged area, through which the smoke escaped. The patent right for this stack was subsequently sold to Messrs. Radley & Hunter, and its essential principle is still used in the Radley & Hunter stack as at present made.

In 1845, Mr. Baldwin built three locomotives for the Royal Railroad Company of Würtemberg. They were of fifteen tons weight, on six wheels, four of them being sixty inches in diameter and coupled. The front drivers were combined by the flexible beams into a truck with the smaller leading wheels. The cylinders were inclined and outside, and the connecting-rods took hold of a half-crank axle back of the fire-box. It was specified that these engines should have the link-motion which had shortly before been introduced in England by the Stephensons. Mr. Baldwin accordingly applied a link of a peculiar character to suit his own ideas of the device. The link was made solid, and of a truncated V-section, and the block was grooved so as to fit and slide on the outside of the link.

During the year 1845 another important feature in locomotive construction—the cut-off valve—was added to Mr. Baldwin's practice. Up to that time the valve-motion had been the two eccentrics, with the single flat hook for each cylinder. Since 1841, Mr. Baldwin had contemplated the addition of some device allowing the steam to be used expansively, and he now added the "half-stroke cut-off." In this device the steam-chest was separated by a horizontal plate into an upper and a lower compartment. In the upper compartment, a valve, worked by a separate eccentric, and having a single opening, admitted steam through a port in this plate to the lower steam-chamber. The valve-rod of the upper valve terminated in a notch or hook, which engaged with the upper arm of its rock-shaft. When thus working, it acted as a cut-off at a fixed part of the stroke, determined by the setting of the eccentric. This was usually at half the stroke. When it was desired to dispense with the cut-

Digitized by Google

off and work steam for the full stroke, the hook of the valve-rod was lifted from the pin on the upper arm of the rock-shaft by a lever worked from the footboard, and the valve-rod was held in a notched rest fastened to the side of the boiler. This left the opening through the upper valve and the port in the partition plate open for the free passage of steam throughout the whole stroke. The first application of the half-stroke cut-off was made on the engine "Champlain" (20 D), built for the Philadelphia and Reading Railroad Company, in 1845. It at once became the practice to apply the cut-off on all passenger engines, while the six- and eight-wheels-connected freight engines were, with a few exceptions, built for a time longer with the single valve admitting steam for the full stroke.

After building, during the years 1843, 1844, and 1845, ten four-wheels-connected engines on the plan above described, viz., six wheels in all, the leading wheels and the front drivers being combined into a truck by the flexible beams, Mr. Baldwin finally adopted the present design of four drivers and a four-wheeled truck. Some of his customers who were favorable to the latter plan had ordered such machines of other builders, and Colonel Gadsden, President of the South Carolina Railroad Company, called on him in 1845 to build for that line some passenger engines of this pattern. He accordingly bought the patent-right for this plan of engine of Mr. H. R. Campbell, and for the equalizing beams used between the drivers, of Messrs. Eastwick & Harrison, and delivered to the South Carolina Railroad Company, in December, 1845, his first eight-wheeled engine with four drivers and a four-wheeled truck. This machine had cylinders thirteen and three-quarters by eighteen, and drivers sixty inches in diameter, with the springs between them arranged as equalizers. Its weight was fifteen tons. It had the half-crank axle, the cylinders being inside the frame but outside the smoke-box. The inside-connected engine, counterweighting being as yet unknown, was admitted to be steadier in running, and hence more suitable for passenger service. With the completion of the first eight-wheeled "C" engine, Mr. Baldwin's feelings underwent a revulsion in favor of this plan, and his partiality for it became as great as had been his antipathy before. Commenting

Digitized by Google

on the machine, he recorded himself as "more pleased with its appearance and action than any engine he had turned out." In addition to the three engines of this description for the South Carolina Railroad Company, a duplicate was sent to the Camden and Amboy Railroad Company, and a similar but lighter one to the Wilmington and Baltimore Railroad Company, shortly afterward. The engine for the Camden and Amboy Railroad Company, and perhaps the others, had the half-stroke cut-off.

From that time forward all of his four-wheels-connected machines were built on this plan, and the six-wheeled "C" engine was abandoned, except in the case of one built for the Philadelphia, Germantown and Norristown Railroad Company in 1846, and this was afterwards rebuilt into a six-wheels-connected machine. Three methods of carrying out the general design were, however, subsequently followed. At first the half-crank was used; then horizontal cylinders inclosed in the chimney-seat and working a full-crank axle, which form of construction had been practised at the Lowell Works; and eventually, outside cylinders with outside connections.

Meanwhile the flexible truck machine maintained its popularity for heavy freight service. All the engines thus far built on this plan had been six-wheeled, some with the rear driving-axle back

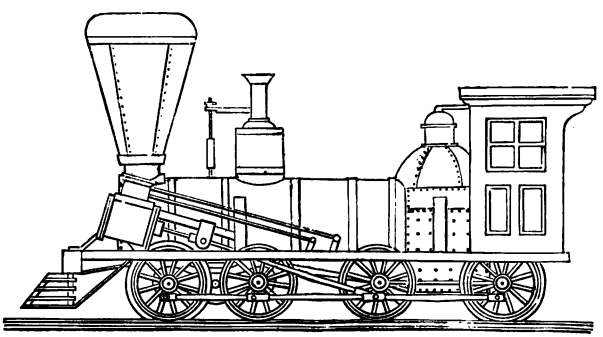

BALDWIN EIGHT-WHEELS-CONNECTED ENGINE, 1846.

of the fire-box, and others with it in front. The next step, following logically after the adoption of the eight-wheeled "C" engine, was to increase the size of the freight machine, and distribute the weight on eight wheels all connected, the two rear

Digitized by Google

pairs being rigid in the frame, and the two front pairs combined into the flexible-beam truck. This was first done in 1846, when seventeen engines on this plan were constructed on one order for the Philadelphia and Reading Railroad Company. Fifteen of these were of twenty tons weight, with cylinders fifteen and a half by twenty, and wheels forty-six inches in diameter; and two of twenty-five tons weight, with cylinders seventeen and a quarter by eighteen, and drivers forty-two inches in diameter. These engines were the first ones on which Mr. Baldwin placed sand boxes, and they were also the first built by him with roofs. On all previous engines the footboard had only been inclosed by a railing. On these engines for the Reading Railroad four iron posts were carried up, and a wooden roof supported by them. The engine-men added curtains at the sides and front, and Mr. Baldwin on subsequent engines added sides, with sash and glass. The cab proper, however, was of New England origin, where the severity of the climate demanded it, and where it had been used previous to this period.

Forty-two engines were completed in 1846, and thirty-nine in 1847. The only novelty to be noted among them was the engine "M. G. Bright," built for operating the inclined plane on the Madison and Indianapolis Railroad. The rise of this incline was one in seventeen, from the bank of the Ohio River at Madison. The engine had eight wheels, forty-two inches in diameter, connected, and worked in the usual manner by outside inclined cylinders, fifteen and one-half inches diameter by twenty inches stroke. A second pair of cylinders, seventeen inches in diameter with eighteen inches stroke of piston, was placed vertically over the boiler, midway between the furnace and smoke arch. The connecting-rods worked by these cylinders connected with cranks on a shaft

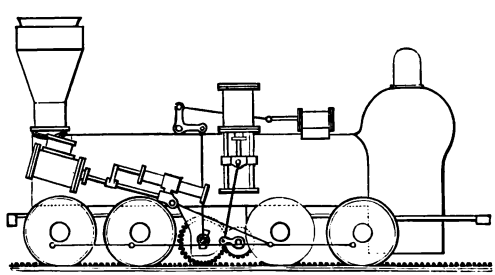

BALDWIN ENGINE FOR RACK-RAIL, 1847.

Digitized by Google

under the boiler. This shaft carried a single cog-wheel at its centre, and this cog-wheel engaged with another of about twice its diameter on a second shaft adjacent to it and in the same plane. The cog-wheel on this latter shaft worked in a rack-rail placed in the centre of the track. The shaft itself had its bearings in the lower ends of two vertical rods, one on each side of the boiler, and these rods were united over the boiler by a horizontal bar which was connected by means of a bent lever and connecting-rod to the piston worked by a small horizontal cylinder placed on top of the boiler. By means of this cylinder, the yoke carrying the shaft and cog-wheel could be depressed and held down so as to engage the cogs with the rack-rail, or raised out of the way when only the ordinary drivers were required. This device was designed by Mr. Andrew Cathcart, Master Mechanic of the Madison and Indianapolis Railroad. A similar machine, the "John Brough," for the same plane, was built by Mr. Baldwin in 1850. The incline was worked with a rack-rail and these engines until it was finally abandoned and a line with easier gradients substituted.

The use of iron tubes in freight engines grew in favor, and in October, 1847, Mr. Baldwin noted that he was fitting his flues with copper ends, "for riveting to the boiler."

The subject of burning coal continued to engage much attention, but the use of anthracite had not as yet been generally successful. In October, 1847, the Baltimore and Ohio Railroad Company advertised for proposals for four engines to burn Cumberland coal, and the order was taken and filled by Mr. Baldwin with four of his eight-wheels-connected machines. These engines had a heater on top of the boiler for heating the feed-water, and a grate with a rocking-bar in the centre, having fingers on each side which interlocked with projections on fixed bars, one in front and one behind. The rocking-bar was operated from the foot-board. This appears to have been the first instance of the use of a rocking-grate in the practice of these works.

The year 1848 showed a falling off in business, and only twenty engines were turned out. In the following year, however, there was a rapid recovery, and the production of the works

Digitized by Google

increased to thirty, followed by thirty-seven in 1850, and fifty in 1851. These engines, with a few exceptions, were confined to three patterns, the eight-wheeled four-coupled engine, from twelve to nineteen tons in weight, for passengers and freight, and the six- and eight-wheels-connected engine, for freight exclusively, the six-wheeled machine weighing from twelve to seventeen tons, and the eight-wheeled from eighteen to twenty-seven tons. The drivers of these six- and eight-wheels-connected machines were made generally forty-two, with occasional variations up to forty-eight inches in diameter.

The exceptions referred to in the practice of these years were the fast passenger engines built by Mr. Baldwin during this period. Early in 1848 the Vermont Central Railroad was approaching completion, and Governor Paine, the President of the Company, conceived the idea that the passenger service on the road required locomotives capable of running at very high velocities. Henry R. Campbell, Esq., was a contractor in building the line, and was authorized by Governor Paine to come to Philadelphia and offer Mr. Baldwin ten thousand dollars for a locomotive which could run with a passenger train at a speed of sixty miles per hour. Mr. Baldwin at once undertook to

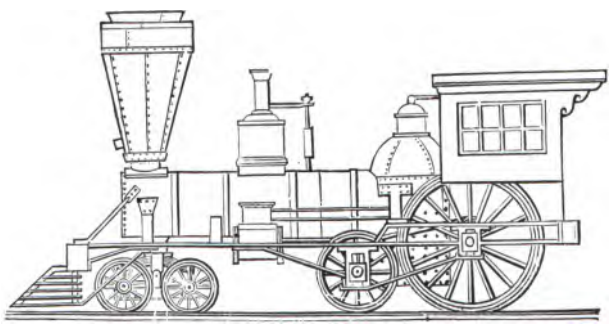

BALDWIN FAST PASSENGER ENGINE, 1848.

meet these conditions. The work was begun early in 1848, and in March of that year Mr. Baldwin filed a caveat for his design. The engine was completed in 1849, and was named the "Governor Paine." It had one pair of driving-wheels, six and a half feet in diameter, placed back of the fire-box. Another pair of

Digitized by Google

wheels, but smaller and unconnected, was placed directly in front of the fire-box, and a four-wheeled truck carried the front of the engine. The cylinders were seventeen and a quarter inches diameter and twenty inches stroke, and were placed horizontally between the frames and the boiler, at about the middle of the waist. The connecting-rods took hold of "half-cranks" inside of the driving-wheels. The object of placing the cylinders at the middle of the boiler was to lessen or obviate the lateral motion of the engine, produced when the cylinders were attached to the smoke-arch. The bearings on the two rear axles were so contrived that, by means of a lever, a part of the weight of the engine usually carried on the wheels in front of the fire-box could be transferred to the driving-axle. The "Governor Paine" was used for several years on the Vermont Central Railroad, and then rebuilt into a four-coupled machine. During its career, it was stated by the officers of the road that it could be started from a state of rest and run a mile in forty-three seconds. Three engines on the same plan, but with cylinders fourteen by twenty, and six-feet driving-wheels, the "Mifflin," "Blair," and "Indiana," were also built for the Pennsylvania Railroad Company in 1849. They weighed each about forty-seven thousand pounds, distributed as follows: eighteen thousand on the drivers, fourteen thousand on the pair of wheels in front of the fire-box, and fifteen thousand on the truck. By applying the lever, the weight on the drivers could be increased to about twenty-four thousand pounds, the weight on the wheels in front of the fire-box being correspondingly reduced. A speed of four miles in three minutes is recorded for them, and upon one occasion President Taylor was taken in a special train over the road by one of these machines at a speed of sixty miles an hour. One other engine of this pattern, the "Susquehanna," was built for the Hudson River Railroad Company in 1850. Its cylinders were fifteen inches diameter by twenty inches stroke, and drivers six feet in diameter. All these engines, however, were short-lived, and died young, of insufficient adhesion.

Eight engines with four drivers connected and half-crank axles were built for the New York and Erie Railroad Company in 1849, with seventeen by twenty-inch cylinders; one-half of the

Digitized by Google

number with six-feet and the rest with five-feet drivers. These machines were among the last on which the half-crank axle was used. Thereafter, outside-connected engines were constructed almost exclusively.

In May, 1848, Mr. Baldwin filed a caveat for a four-cylinder locomotive, but never carried the design into execution. The first instance of the use of steel axles in the practice of the establishment occurred during the same year,—a set being placed as an experiment under an engine constructed for the Pennsylvania Railroad Company. In 1850 the old form of dome-boiler, which had characterized the Baldwin engine since 1834, was abandoned, and the wagon-top form substituted.

The business in 1851 had reached the full capacity of the shop, and the next year marked the completion of about an equal number of engines (forty-nine). Contracts for work extended a year ahead, and, to meet the demand, the facilities in the various departments were increased, and resulted in the construction of sixty engines in 1853, and sixty-two in 1854.

At the beginning of the latter year, Mr. Matthew Baird, who had been connected with the works since 1836 as one of its foremen, entered into partnership with Mr. Baldwin, and the style of the firm was made M. W. Baldwin & Co.

The only novelty in the general plan of engines during this period was the addition of a ten-wheeled engine to the patterns of the establishment. The success of Mr. Baldwin's engines with all six or eight wheels connected, and the two front pairs combined by the parallel beams into a flexible truck, had been so marked that it was natural that he should oppose any other plan for freight service. The ten-wheeled engine, with six drivers connected, had, however, now become a competitor. This plan of engine was first patented by Septimus Norris, of Philadelphia, in 1846, and the original design was apparently to produce an engine which should have equal tractive power with the Baldwin six-wheels-connected machine. This the Norris patent sought to accomplish by proposing an engine with six drivers connected, and so disposed as to carry substantially the whole weight, the forward drivers being in advance of the centre of gravity of the engine, and the truck only serving as a guide,

Digitized by Google

the front of the engine being connected with it by a pivot-pin, but without a bearing on the centre-plate. Mr. Norris's first engine on this plan was tried in April, 1847, and was found not to pass curves so readily as was expected. As the truck carried little or no weight, it would not keep the track. The New York and Erie Railroad Company, of which John Brandt was then Master Mechanic, shortly afterward adopted the ten-wheeled engine, modified in plan so as to carry a part of the weight on the truck. Mr. Baldwin filled an order for this company, in 1850, of four eight-wheels-connected engines, and in making the contract he agreed to substitute a truck for the front pair of wheels if desired after trial. This, however, he was not called upon to do.

In February, 1852, Mr. J. Edgar Thomson, President of the Pennsylvania Railroad Company, invited proposals for a number of freight locomotives of fifty-six thousand pounds weight each. They were to be adapted to burn bituminous coal, and to have six wheels connected and a truck in front, which might be either of two or four wheels. Mr. Baldwin secured the contract, and built twelve engines of the prescribed dimensions, viz., cylinders eighteen by twenty-two; drivers forty-four inches diameter, with chilled tires. Several of these engines were constructed with a single pair of truck-wheels in front of the drivers, but back of the cylinders. It was found, however, after the engines were put in service, that the two truck-wheels carried eighteen thousand or nineteen thousand pounds, and this was objected to by the company as too great a weight to be carried on a single pair of wheels. On the rest of the engines of the order, therefore, a four-wheeled truck in front was employed.

The ten-wheeled engine thereafter assumed a place in the Baldwin classification, but it was some years—not until after 1860, however—before this pattern of engine wholly superseded in Mr. Baldwin's practice the old plan of freight engine on six or eight wheels, all connected.

In 1855–56, two of twenty-seven tons weight, nineteen by twenty-two cylinders, forty-eight inches drivers, were built for the Portage Railroad, and three for the Pennsylvania Railroad. In 1855, '56, and '57, fourteen of the same dimensions were

Digitized by Google

built for the Cleveland and Pittsburg Railroad; four for the Pittsburg, Fort Wayne and Chicago Railroad; and one for the Marietta and Cincinnati Railroad. In 1858 and '59, one was constructed for the South Carolina Railroad, of the same size, and six lighter ten-wheelers, with cylinders fifteen and a half by twenty-two, and four-feet drivers, and two with cylinders sixteen by twenty-two, and four-feet drivers, were sent out to railroads in Cuba.

On three locomotives—the "Clinton," "Athens," and "Sparta" —completed for the Central Railroad of Georgia in July, 1852, the driving boxes were made with a slot or cavity in the line of the vertical bearing on the journal. The object was to produce a more uniform distribution of the wear over the entire surface of the bearing. This was the first instance in which this device, which has since come into general use, was employed in the Works, and the boxes were so made by direction of Mr. Charles Whiting, then Master Mechanic of the Central Railroad of Georgia. He subsequently informed Mr. Baldwin that this method of fitting up driving-boxes had been in use on the road for several years previous to his connection with the company. As this device was subsequently made the subject of a patent by Mr. David Matthew, these facts may not be without interest.

In 1853, Mr. Charles Ellet, Chief Engineer of the Virginia Central Railroad, laid a temporary track across the Blue Ridge, at Rock Fish Gap, for use during the construction of a tunnel through the mountain. This track was twelve thousand five hundred feet in length on the eastern slope, ascending in that distance six hundred and ten feet, or at the average rate of one in twenty and a half feet. The maximum grade was calculated for two hundred and ninety-six feet per mile, and prevailed for half a mile. It was found, however, in fact, that the grade in places exceeded three hundred feet per mile. The shortest radius of curvature was two hundred and thirty-eight feet. On the western slope, which was ten thousand six hundred and fifty feet in length, the maximum grade was two hundred and eighty feet per mile, and the ruling radius of curvature three hundred feet. This track was worked by two of the Baldwin six-wheels-connected flexible-beam truck locomotives constructed in 1853–

Digitized by Google

54. From a description of this track, and the mode of working it, published by Mr. Ellet in 1856, the following is extracted:

"The locomotives mainly relied on for this severe duty were designed and constructed by the firm of M. W. Baldwin & Company, of Philadelphia. The slight modifications introduced at the instance of the writer to adapt them better to the particular service to be performed in crossing the Blue Ridge, did not touch the working proportions or principle of the engines, the merits of which are due to the patentee, M. W. Baldwin, Esq.

"These engines are mounted on six wheels, all of which are drivers, and coupled, and forty-two inches diameter. The wheels are set very close, so that the distance between the extreme points of contact of the wheels and the rail, of the front and rear drivers, is nine feet four inches. This closeness of the wheels, of course, greatly reduces the difficulty of turning the short curves of the road. The diameter of the cylinders is sixteen and a half inches, and the length of the stroke twenty inches. To increase the adhesion, and at the same time avoid the resistance of a tender, the engine carries its tank upon the boiler, and the footboard is lengthened out and provided with suspended side-boxes, where a supply of fuel may be stored. By this means the weight of wood and water, instead of abstracting from the effective power of the engine, contributes to its adhesion and consequent ability to climb the mountain. The total weight of these engines is fifty-five thousand pounds, or twenty-seven and a half tons, when the boiler and tank are supplied with water, and fuel enough for a trip of eight miles is on board. The capacity of the tank is sufficient to hold one hundred cubic feet of water, and it has storage-room on top for one hundred cubic feet of wood, in addition to what may be carried in the side-boxes and on the footboard.

"To enable the engines better to adapt themselves to the flexures of the road, the front and middle pairs of drivers are held in position by wrought-iron beams, having cylindrical boxes in each end for the journal-bearings, which beams vibrate on spherical pins fixed in the frame of the engine on each side, and resting on the centres of the beams. The object of this arrangement is to form a truck, somewhat flexible, which enables the drivers more readily to traverse the curves of the road.

"The writer has never permitted the power of the engines on this mountain road to be fully tested. The object has been to work the line regularly, economically, and, above all, *safely;* and these conditions are incompatible with experimental loads subjecting the machinery to severe strains. The regular daily service of each of the engines is to make four trips, of eight miles, over the mountain, drawing one eight-wheel baggage car, together with two eight-wheel passenger cars, in each direction.

"In conveying freight, the regular train on the mountain is three of the eight-wheel house-cars, fully loaded, or four of them when empty or partly loaded.

"These three cars, when full, weigh, with their loads, from forty to forty-three tons. Sometimes, though rarely, when the business has been unusually heavy, the loads have exceeded fifty tons.

"With such trains the engines are stopped on the track, ascending or descending, and are started again, on the steepest grades, at the discretion of the engineer.

"Water, for the supply of the engines, has been found difficult to obtain on the

Digitized by Google

mountain; and, since the road was constructed, a tank has been established on the eastern slope, where the ascending engines stop daily on a grade of two hundred and eighty feet per mile, and are there held by the brakes while the tank is being filled, and started again at the signal and without any difficulty.

"The ordinary speed of the engines, when loaded, is seven and a half miles an hour on the ascending grades, and from five and a half to six miles an hour on the descent.

"When the road was first opened, it speedily appeared that the difference of forty-three feet on the western side, and fifty-eight on the eastern side, between the grades on curves of three hundred feet radii and those on straight lines, was not sufficient to compensate for the increased friction due to such curvature. The velocity, with a constant supply of steam, was promptly retarded on passing from a straight line to a curve, and promptly accelerated again on passing from the curve to the straight line. But, after a little experience in the working of the road, it was found advisable to supply a small amount of grease to the flange of the engine by means of a sponge, saturated with oil, which, when needed, is kept in contact with the wheel by a spring. Since the use of the oil was introduced, the difficulty of turning the curves has been so far diminished, that it is no longer possible to determine whether grades of two hundred and thirty-seven and six-tenths feet per mile on curves of three hundred feet radius, or grades of two hundred and ninety-six feet per mile on straight lines, are traversed most rapidly by the engine.

"When the track is in good condition, the brakes of only two of the cars possess sufficient power to control and regulate the movement of the train,—that is to say, they will hold back the two cars and the engine. When there are three or more cars in the train, the brakes on the cars, of course, command the train so much the more easily.

"But the safety of the train is not dependent on the brakes of the car. There is also a valve or air-cock in the steam-chest, under the control of the engineer. This air-cock forms an independent brake, exclusively at the command of the engineer, and which can always be applied when the engine itself is in working order. The action of this power may be made ever so gradual, either slightly relieving the duty of the brakes on the cars, or bringing into play the entire power of the engine. The train is thus held in complete command."

The Mountain Top Track, it may be added, was worked successfully for several years, by the engines described in the above extract, until it was abandoned on the completion of the tunnel. The exceptionally steep grades and short curves which characterized the line, afforded a complete and satisfactory test of the adaptation of these machines to such peculiar service.

But the period now under consideration was marked by another, and a most important, step in the progress of American locomotive practice. We refer to the introduction of the link-motion. Although this device was first employed by William T. James, of New York, in 1832, and eleven years later by the

H. T. Cory

Digitized by Google

Stephensons, in England, and was by them applied thenceforward on their engines, it was not until 1849 that it was adopted in this country. In that year Mr. Thomas Rogers, of the Rogers Locomotive and Machine Company, introduced it in his practice. Other builders, however, strenuously resisted the innovation, and none more so than Mr. Baldwin. The theoretical objections which confessedly apply to the device, but which practically have been proved to be unimportant, were urged from the first by Mr. Baldwin as arguments against its use. The strong claim of the advocates of the link-motion, that it gave a means of cutting off steam at any point of the stroke, could not be gainsaid, and this was admitted to be a consideration of the first importance. This very circumstance undoubtedly turned Mr. Baldwin's attention to the subject of methods for cutting off steam, and one of the first results was his "Variable Cut-off," patented April 27, 1852. This device consisted of two valves, the upper sliding upon the lower, and worked by an eccentric and rock-shaft in the usual manner. The lower valve fitted steam-tight to the sides of the steam-chest and the under surface of the upper valve. When the piston reached each end of its stroke, the full pressure of steam from the boiler was admitted around the upper valve, and transferred the lower valve instantaneously from one end of the steam-chest to the other. The openings through the two valves were so arranged that steam was admitted to the cylinder only for a part of the stroke. The effect was, therefore, to cut off steam at a given point, and to open the induction and exhaust ports substantially at the same instant and to their full extent. The exhaust port, in addition, remained fully opened while the induction port was gradually closing, and after it had entirely closed. Although this device was never put in use, it may be noted in passing that it contained substantially the principle of the steam-pump, as since patented and constructed.

Early in 1853, Mr. Baldwin abandoned the half-stroke cut-off, previously described, and which he had been using since 1845, and adopted the variable cut-off, which was already employed by other builders. One of his letters, written in January, 1853, states his position, as follows:

Digitized by Google

"I shall put on an improvement in the shape of a variable cut-off, which can be operated by the engineer while the machine is running, and which will cut off anywhere from six to twelve inches, according to the load and amount of steam wanted, and this without the link-motion, which I could never be entirely satisfied with. I still have the independent cut-off, and the additional machinery to make it variable will be simple and not liable to be deranged."

This form of cut-off was a separate valve, sliding on a partition plate between it and the main steam-valve, and worked by an independent eccentric and rock-shaft. The upper arm of the rock-shaft was curved so as to form a radius-arm, on which a sliding-block, forming the termination of the upper valve-rod, could be adjusted and held at varying distances from the axis, thus producing a variable travel of the upper valve. This device did not give an absolutely perfect cut-off, as it was not operative in backward gear, but when running forward it would cut off with great accuracy at any point of the stroke, was quick in its movement, and economical in the consumption of fuel.

After a short experience with this arrangement of the cut-off, the partition plate was omitted, and the upper valve was made to slide directly on the lower. This was eventually found objectionable, however, as the lower valve would soon cut a hollow in the valve-face. Several unsuccessful attempts were made to remedy this defect by making the lower valve of brass, with long bearings, and making the valve-face of the cylinder of hardened steel; finally, however, the plan of one valve on the other was

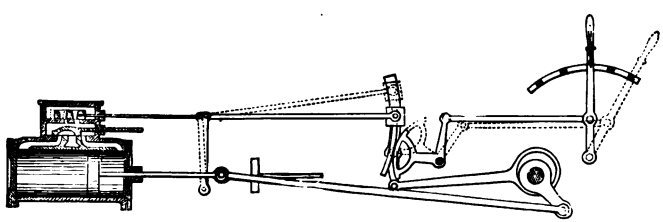

VARIABLE CUT-OFF ADJUSTMENT.

abandoned and a recourse was again had to an interposed partition plate, as in the original half-stroke cut-off.

Mr. Baldwin did not adopt this form of cut-off without some modification of his own, and the modification in this instance consisted of a peculiar device, patented September 13, 1835, for

Digitized by Google

raising and lowering the block on the radius-arm. A quadrant was placed so that its circumference bore nearly against a curved arm projecting down from the sliding-block, and which curved in the reverse direction from the quadrant. Two steel straps side by side were interposed between the quadrant and this curved arm. One of the straps was connected to the lower end of the quadrant and the upper end of the curved arm; the other, to the upper end of the quadrant and the lower end of the curved arm. The effect was the same as if the quadrant and arm geared into each other in any position by teeth, and theoretically the block was kept steady in whatever position placed on the radius-arm of the rock-shaft. This was the object sought to be accomplished, and was stated in the specification of the patent as follows:

"The principle of varying the cut-off by means of a vibrating arm and sliding pivot-block has long been known, but the contrivances for changing the position of the block upon the arm have been very defective. The radius of motion of the link by which the sliding-block is changed on the arm, and the radius of motion of that part of the vibrating arm on which the block is placed, have, in this kind of valve gear, as heretofore constructed, been different, which produced a continual rubbing of the sliding-block upon the arm while the arm is vibrating; and as the block for the greater part of the time occupies one position on the arm, and only has to be moved toward either extremity occasionally, that part of the arm on which the block is most used soon becomes so worn that the block is loose, and jars."

This method of varying the cut-off was first applied on the engine "Belle," delivered to the Pennsylvania Railroad Company, December 6, 1854, and thereafter was for some time employed by Mr. Baldwin. It was found, however, in practice that the steel straps would stretch sufficiently to allow them to buckle and break, and hence they were soon abandoned, and chains substituted between the quadrant and curved arm of the sliding-block. These chains in turn proved little better, as they lengthened, allowing lost motion, or broke altogether, so that eventually the quadrant was wholly abandoned, and recourse was finally had to the lever and link for raising and lowering the sliding-block. As thus arranged, the cut-off was substantially what was known as the "Cuyahoga Cut-off," as introduced by Mr. Ethan Rogers, of the Cuyahoga Works, Cleveland, Ohio, except that Mr. Baldwin used a partition plate between the upper and the lower valve.

Digitized by Google

But while Mr. Baldwin, in common with many other builders, was thus resolutely opposing the link-motion, it was nevertheless rapidly gaining favor with Railroad managers. Engineers and master mechanics were everywhere learning to admire its simplicity, and were manifesting an enthusiastic preference for engines so constructed. At length, therefore, he was forced to succumb; and the link was applied to the "Pennsylvania," one of two engines completed for the Central Railroad of Georgia, in February, 1854. The other engine of the order, the "New Hampshire," had the variable cut-off, and Mr. Baldwin, while yielding to the demand in the former engine, was undoubtedly sanguine that the working of the latter would demonstrate the inferiority of the new device. In this, however, he was disappointed, for in the following year the same company ordered three more engines, on which they specified the link-motion. In 1856 seventeen engines for nine different companies had this form of valve-gear, and its use was thus incorporated in his practice. It was not, however, until 1857 that he was induced to adopt it exclusively.

February 14, 1854, Mr. Baldwin and Mr. David Clark, Master Mechanic of the Mine Hill Railroad, took out conjointly a patent for a feed-water heater, placed at the base of a locomotive chimney, and consisting of one large vertical flue, surrounded by a number of smaller ones. The exhaust steam was discharged from the nozzles through the large central flue, creating a draft of the products of combustion through the smaller surrounding flues. The pumps forced the feed-water into the chamber around these flues, whence it passed to a boiler by the pipe from the back of the stack. This heater was applied on several engines for the Mine Hill Railroad, and on a few other roads; but its use was exceptional, and lasted only for a year or two.

In December of the same year, Mr. Baldwin filed a caveat for a variable exhaust, operated automatically, by the pressure of steam, so as to close when the pressure was lowest in the boiler, and open with the increase of pressure. The device was never put in service.

The use of coal, both bituminous and anthracite, as a fuel for locomotives, had by this time become a practical success. The

Digitized by Google

economical combustion of bituminous coal, however, engaged considerable attention. It was felt that much remained to be accomplished in consuming the smoke and deriving the maximum of useful effect from the fuel. Mr. Baird, who was now associated with Mr. Baldwin in the management of the business, made this matter a subject of careful study and investigation. An experiment was conducted under his direction, by placing a sheet-iron deflector in the fire-box of an engine on the Germantown and Norristown Railroad. The success of the trial was such as to show conclusively that a more complete combustion resulted. As, however, a deflector formed by a single plate of iron would soon be destroyed by the action of the fire, Mr. Baird proposed to use a water-leg projecting upward and backward from the front of the fire-box under the flues. Drawings and a model of the device were prepared, with a view of patenting it, but subsequently the intention was abandoned, Mr. Baird concluding that a fire-brick arch as a deflector to accomplish the same object was preferable. This was accordingly tried on two locomotives built for the Pennsylvania Railroad Company in 1854, and was found so valuable an appliance that its use was at once established, and it was put on a number of engines built for railroads in Cuba and elsewhere. For several years the fire-bricks were supported on side plugs; but in 1858, in the "Media," built for the West Chester and Philadelphia Railroad Company, water-pipes extending from the crown obliquely downward and curving to the sides of the fire-box at the bottom were successfully used for the purpose.

The adoption of the link-motion may be regarded as the dividing line between the present and the early and transitional stage of locomotive practice. Changes since that event have been principally in matters of detail, but it is the gradual perfection of these details which has made the locomotive the symmetrical, efficient, and wonderfully complete piece of mechanism it is to-day. In perfecting these minutiæ, the Baldwin Locomotive Works has borne its part, and it only remains to state briefly its contributions in this direction.

The production of the establishment during the six years from 1855 to 1860, inclusive, was as follows: forty-seven engines in

Digitized by Google

1855; fifty-nine in 1856; sixty-six in 1857; thirty-three in 1858; seventy in 1859; and eighty-three in 1860. The greater number of these were of the ordinary type, four drivers coupled, and a four-wheeled truck, and varying in weight from fifteen ton engines, with cylinders twelve by twenty-two, to twenty-seven ton engines, with cylinders sixteen by twenty-four. A few ten-wheeled engines were built, as has been previously noted, and the remainder were the Baldwin flexible-truck six- and eight-wheels-connected engines. The demand for these, however, was now rapidly falling off, the ten-wheeled and heavy "C" engines taking their place, and by 1859 they ceased to be built, save in exceptional cases, as for some foreign roads, from which orders for this pattern were still occasionally received.

A few novelties characterizing the engines of this period may be mentioned. Several engines built in 1855 had cross-flues placed in the fire-box, under the crown, in order to increase the heating surface. This feature, however, was found impracticable, and was soon abandoned. The intense heat to which the flues were exposed converted the water contained in them into highly superheated steam, which would force its way out through the water around the fire-box with violent ebullitions. Four engines were built for the Pennsylvania Railroad Company, in 1856–57, with straight boilers and two domes. The "Delano" grate, by means of which the coal was forced into the fire-box from below, was applied on four ten-wheeled engines for the Cleveland and Pittsburg Railroad in 1857. In 1859 several engines were built with the form of boiler introduced on the Cumberland Valley Railroad in 1851 by Mr. A. F. Smith, and which consisted of a combustion-chamber in the waist of the boiler, next the fire-box. This form of boiler was for some years thereafter largely used in engines for soft coal. It was at first constructed with the "water-leg," which was a vertical water-space, connecting the top and bottom sheets of the combustion-chamber, but eventually this feature was omitted, and an unobstructed combustion-chamber employed. Several engines were built for the Philadelphia, Wilmington and Baltimore Railroad Company in 1859, and thereafter, with the "Dimpfel" boiler, in which the tubes contain water, and, starting downward from the crown-sheet, are curved

Digitized by Google

to the horizontal, and terminate in a narrow water-space next the smoke-box. The whole waist of the boiler, therefore, forms a combustion-chamber, and the heat and gases, after passing for their whole length along and around the tubes, emerge into the lower part of the smoke-box.

In 1860 an engine was built for the Mine Hill Railroad, with a boiler of a peculiar form. The top sheets sloped upward from both ends toward the centre, thus making a raised part or hump in the centre. The engine was designed to work on heavy grades, and the object sought by Mr. Wilder, the Superintendent of the Mine Hill Railroad, was to have the water always at the same height in the space from which steam was drawn, whether going up or down grade.

All these experiments are indicative of the interest then prevailing upon the subject of coal-burning. The result of experience and study had meantime satisfied Mr. Baldwin that to burn soft coal successfully required no peculiar devices; that the ordinary form of boiler, with plain fire-box, was right, with perhaps the addition of a fire-brick deflector; and that the secret of the economical and successful use of coal was in the mode of firing, rather than in a different form of furnace.

The year 1861 witnessed a marked falling off in the production. The breaking out of the civil war at first unsettled business, and by many it was thought that railroad traffic would be so largely reduced that the demand for locomotives must cease altogether. A large number of hands were discharged from the works, and only forty locomotives were turned out during the year. It was even seriously contemplated to turn the resources of the establishment to the manufacture of shot and shell, and other munitions of war, the belief being entertained that the building of locomotives would have to be altogether suspended. So far, however, was this from being the case, that, after the first excitement had subsided, it was found that the demand for transportation by the general government, and by the branches of trade and production stimulated by the war, was likely to tax the carrying capacity of the principal Northern railroads to the fullest extent. The government itself became a large purchaser of locomotives, and it is noticeable, as indicating the increase of

Digitized by Google

travel and freight transportation, that heavier machines than had ever before been built became the rule. Seventy-five engines were sent from the works in 1862; ninety-six in 1863; one hundred and thirty in 1864; and one hundred and fifteen in 1865. During two years of this period, from May, 1862, to June, 1864, thirty-three engines were built for the United States Military Railroads. The demand from the various coal-carrying roads in Pennsylvania and vicinity was particularly active, and large numbers of ten-wheeled engines, and of the heaviest eight-wheeled four-coupled engines, were built. Of the latter class, the majority were fifteen- and sixteen-inch cylinders, and of the former, seventeen- and eighteen-inch cylinders.

The introduction of several important features in construction marks this period. Early in 1861, four eighteen-inch cylinder freight locomotives, with six coupled wheels, fifty-two inches in diameter, and a Bissell pony-truck with radius-bar in front, were sent to the Louisville and Nashville Railroad Company. This was the first instance of the use of the Bissell truck in the Baldwin Works. These engines, however, were not of the regular "Mogul" type, as they were only modifications of the ten-wheeler, the drivers retaining the same position well back, and a pair of pony-wheels on the Bissell plan taking the place of the ordinary four-wheeled truck. Other engines of the same pattern, but with eighteen and one-half inch cylinders, were built in 1862–63, for the same company, and for the Dom Pedro II. Railway of Brazil.

The introduction of steel in locomotive-construction was a distinguishing feature of the period. Steel tires were first used in the works in 1862, on some engines for the Dom Pedro II. Railway of South America. Their general adoption on American Railroads followed slowly. No tires of this material were then made in this country, and it was objected to their use that, as it took from sixty to ninety days to import them, an engine, in case of a breakage of one of its tires, might be laid up useless for several months. To obviate this objection M. W. Baldwin & Co. imported five hundred steel tires, most of which were kept in stock, from which to fill orders. The steel tires as first used in 1862 on the locomotives for the Dom Pedro Segundo

Digitized by Google

Railway were made with a "shoulder" at one edge of the internal periphery, and were shrunk on the wheel-centres. The sketch below shows a section of the tire as then used.

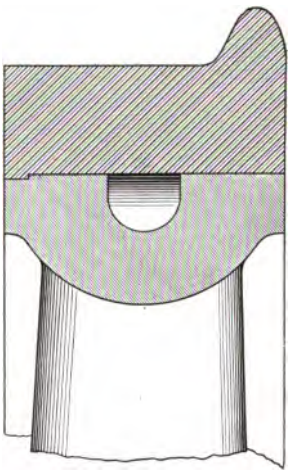

STEEL TIRE, WITH SHOULDER.

Steel fire-boxes were first built for some engines for the Pennsylvania Railroad Company in 1861. English steel of a high temper was used, and at the first attempt the fire-boxes cracked in fitting them in the boilers, and it became necessary to take them out and substitute copper. American homogeneous cast-steel was then tried on engines 231 and 232, completed for the Pennsylvania Railroad in January, 1862, and it was found to work successfully. The fire-boxes of nearly all engines thereafter built for that road were of this material, and in 1866 its use for the purpose became general. It may be added that while all steel sheets for fire-boxes or boilers are required to be thoroughly annealed before delivery, those which are flanged or worked in the process of boiler construction are a second time annealed before riveting.

Another feature of construction gradually adopted was the placing of the cylinders horizontally. This was first done in the case of an outside-connected engine, the "Ocmulgee," which was sent to the Southwestern Railroad Company of Georgia, in January, 1858. This engine had a square smoke-box, and the cylinders were bolted horizontally to its sides. The plan of casting the cylinder and half-saddle in one piece and fitting it to the round smoke-box was introduced by Mr. Baldwin, and grew naturally out of his original method of construction. Mr. Baldwin was the first American builder to use an outside cylinder, and he made it for his early engines with a circular flange cast to it, by which it could be bolted to the boiler. The cylinders were gradually brought lower, and at a less angle, and the flanges prolonged and enlarged. In 1852, three six-

Digitized by Google

wheels-connected engines, for the Mine Hill Railroad Company, were built with the cylinder flanges brought around under the smoke-box until they nearly met, the space between them being filled with a spark-box. This was practically equivalent to making the cylinder and half-saddle in one casting. Subsequently, on other engines on which the spark-box was not used, the half-saddles were cast so as almost to meet under the smoke-box, and, after the cylinders were adjusted in position, wedges were fitted in the interstices and the saddles bolted together. It was finally discovered that the faces of the two half-saddles might be planed and finished so that they could be bolted together and bring the cylinders accurately in position, thus avoiding the troublesome and tedious job of adjusting them by chipping and fitting to the boiler and frames. With this method of construction, the cylinders were placed at a less and less angle, until at length the truck-wheels were spread sufficiently, on all new or modified classes of locomotives in the Baldwin list, to admit of the cylinders being hung horizontally, as is the present almost universal American practice. By the year 1865 horizontal cylinders were made in all cases where the patterns would allow it. The advantages of this arrangement are manifestly in the interest of simplicity and economy, as the cylinders are thus rights or lefts, indiscriminately, and a single pattern answers for either side.

A distinguishing feature in the method of construction which characterizes these works is the extensive use of a system of standard gauges and templets, to which all work admitting of this process is required to be made. The importance of this arrangement, in securing absolute uniformity of essential parts in all engines of the same class, is manifest, and with the increased production since 1861 it became a necessity as well as a decided advantage. It has already been noted that as early as 1839 Mr. Baldwin felt the importance of making all like parts of similar engines absolutely uniform and interchangeable. It was not attempted to accomplish this object, however, by means of a complete system of standard gauges, until many years later. In 1861 a beginning was made of organizing all the departments of manufacture upon this basis, and from it has since grown an

Digitized by Google

elaborate and perfected system, embracing all the essential details of construction. An independent department of the works, having a separate foreman and an adequate force of skilled workmen, with special tools adapted to the purpose, is organized as the Department of Standard Gauges. A system of standard gauges and templets for every description of work to be done is made and kept by this department. The original templets are kept as "standards," and are never used on the work itself, but from them exact duplicates are made, which are issued to the foremen of the various departments, and to which all work is required to conform. The working gauges are compared with the standards at regular intervals, and absolute uniformity is thus maintained. The system is carried into every possible important detail. Frames are planed and slotted to gauges, and drilled to steel bushed templets. Cylinders are bored and planed, and steam-ports, with valves and steam-chests, finished and fitted, to gauges. Tires are bored, centres turned, axles finished, and cross-heads, guides, guide-bearers, pistons, connecting- and parallel-rods planed, slotted, or finished by the same method. Every bolt about the engine is made to a gauge, and every hole drilled and reamed to a templet. The result of the system is an absolute uniformity and interchangeableness of parts in engines of the same class, insuring to the purchaser the minimum cost of repairs, and rendering possible, by the application of this method, the large production which these works have accomplished.

Thus had been developed and perfected the various essential details of existing locomotive practice when Mr. Baldwin died, September 7, 1866. He had been permitted, in a life of unusual activity and energy, to witness the rise and wonderful increase of a material interest which had become the distinguishing feature of the century. He had done much, by his own mechanical skill and inventive genius, to contribute to the development of that interest. His name was as "familiar as household words" wherever on the American continent the locomotive had penetrated. An ordinary ambition might well have been satisfied with this achievement. But Mr. Baldwin's claim to the remembrance of his fellow-men rests not alone on the results of his

Digitized by Google

mechanical labors. A merely technical history, such as this, is not the place to do justice to his memory as a man, as a Christian, and as a philanthropist; yet the record would be manifestly imperfect, and would fail properly to reflect the sentiments of his business associates who so long knew him in all relations of life, were no reference made to his many virtues and noble traits of character. Mr. Baldwin was a man of sterling integrity and singular conscientiousness. To do right, absolutely and unreservedly, in all his relations with men, was an instinctive rule of his nature. His heroic struggle to meet every dollar of his liabilities, principal and interest, after his failure, consequent upon the general financial crash in 1837, constitutes a chapter of personal self-denial and determined effort which is seldom paralleled in the annals of commercial experience. When most men would have felt that an equitable compromise with creditors was all that could be demanded in view of the general financial embarrassment, Mr. Baldwin insisted upon paying all claims in full, and succeeded in doing so only after nearly five years of unremitting industry, close economy, and absolute personal sacrifices. As a philanthropist and a sincere and earnest Christian, zealous in every good work, his memory is cherished by many to whom his contributions to locomotive improvement are comparatively unknown. From the earliest years of his business life the practice of systematic benevolence was made a duty and a pleasure. His liberality constantly increased with his means. Indeed, he would unhesitatingly give his notes, in large sums, for charitable purposes when money was absolutely wanted to carry on his business. Apart from the thousands which he expended in private charities, and of which, of course, little can be known, Philadelphia contains many monuments of his munificence. Early taking a deep interest in all Christian effort, his contributions to missionary enterprise and church extension were on the grandest scale, and grew with increasing wealth. Numerous church edifices in this city, of the denomination to which he belonged, owe their existence largely to his liberality, and two at least were projected and built by him entirely at his own cost. In his mental character, Mr. Baldwin was a man of remarkable firmness of purpose. This trait was strongly shown during his

Digitized by Google

mechanical career in the persistency with which he would work at a new improvement or resist an innovation. If he was led sometimes to assume an attitude of antagonism to features of locomotive-construction which after-experience showed to be valuable,—and a desire for historical accuracy has required the mention, in previous pages, of several instances of this kind,—it is at least certain that his opposition was based upon a conscientious belief in the mechanical impolicy of the proposed changes.

After the death of Mr. Baldwin the business was reorganized, in 1867, under the title of "The Baldwin Locomotive Works," M. Baird & Co., Proprietors. Messrs. George Burnham and Charles T. Parry, who had been connected with the establishment from an early period, the former in charge of the finances, and the latter as General Superintendent, were associated with Mr. Baird in the copartnership. Three years later, Messrs. Edward H. Williams, William P. Henszey, and Edward Longstreth became members of the firm. Mr. Williams had been connected with railway management on various lines since 1850. Mr. Henszey had been Mechanical Engineer, and Mr. Longstreth the General Superintendent of the works for several years previously.

The production of the Baldwin Locomotive Works from 1866 to 1871, both years inclusive, was as follows:

1866, one hundred and eighteen locomotives.
1867, one hundred and twenty-seven "
1868, one hundred and twenty-four "
1869, two hundred and thirty-five "
1870, two hundred and eighty "
1871, three hundred and thirty-one "

In July, 1866, the engine "Consolidation" was built for the Lehigh Valley Railroad, on the plan and specification furnished by Mr. Alexander Mitchell, Master Mechanic of the Mahanoy Division of that Railroad. This engine was intended for working the Mahanoy plane, which rises at the rate of one hundred and thirty-three feet per mile. The "Consolidation" had cylinders twenty by twenty-four, four pairs of drivers connected, forty-eight inches in diameter, and a Bissell pony-truck in front, equalized

Digitized by Google

with the front drivers. The weight of the engine, in working order, was ninety thousand pounds, of which all but about ten thousand pounds was on the drivers. This engine has constituted the first of a class to which it has given its name, and "Consolidation" engines have since been constructed for a large number of railways, not only in the United States, but in Mexico, Brazil, and Australia. Later engines of the class for the four feet eight and a half inch gauge have, however, been made heavier, as will be seen by reference to the description of this type in the catalogue.

"CONSOLIDATION."

A class of engines known as "Moguls," with three pairs of drivers connected and a swinging pony-truck in front equalized with the forward drivers, took its rise in the practice of this establishment from the "E. A. Douglas," built for the Thomas Iron Company in 1867. These engines are fully illustrated in the catalogue. Several sizes of "Moguls" have been built, but principally with cylinders sixteen to nineteen inches in diameter, and twenty-two or twenty-four inches stroke, and with drivers from forty-four to fifty-seven inches in diameter. This plan of engine has rapidly grown in favor for freight service on heavy grades or where maximum loads are to be moved, and has been adopted by several leading lines. Utilizing, as it does, nearly the entire weight of the engine for adhesion, the main and back pairs of drivers being equalized together, as also the front drivers and the pony-wheels, and the construction of the engine with swing-truck and one pair of drivers without flanges allowing it to pass short curves without difficulty, the "Mogul" is generally accepted as a type of engine especially adapted to the economical working of heavy freight traffic.

"MOGUL."

Digitized by Google

In 1867, on a number of eight-wheeled four-coupled engines for the Pennsylvania Railroad, the four-wheeled swing-bolster-truck was first applied, and thereafter a large number of engines have been so constructed. The two-wheeled or "pony-truck" has been built both on the Bissell plan, with double inclined slides, and with the ordinary swing-bolster, and in both cases with the radius-bar pivoting from a point about four feet back from the centre of the truck. The four-wheeled truck has been made with swinging or sliding bolster, and both with and without the radius-bar. Of the engines above referred to as the first on which the swing-bolster-truck was applied, four were for express passenger service, with drivers sixty-seven inches in diameter, and cylinders seventeen by twenty-four. One of them, placed on the road September 9, 1867, was in constant service until May 14, 1871, without ever being off its wheels for repairs, making a total mileage of one hundred and fifty-three thousand two hundred and eighty miles. All of these engines have their driving-wheels spread eight and one-half feet between centres.

Steel flues were first used in three ten-wheeled freight engines, Numbers 211, 338, and 368, completed for the Pennsylvania Railroad in August, 1868. Steel boilers were first made in 1868 for locomotives for the Pennsylvania Railroad Company, and the use of this material for the barrels of boilers as well as for the fire-boxes has now become universal in American practice.

In 1854, four engines for the Pennsylvania Railroad Company, the "Tiger," "Leopard," "Hornet," and "Wasp," were built with straight boilers and two domes each, and in 1866 this method of construction was revived, and until about 1880 the practice of the establishment included both the wagon-top boiler with single dome, and the straight boiler with one or two domes. When the straight boiler is used the waist is made about two inches larger in diameter than that of the wagon-top form. About equal space for water and steam is thus given in either case, and, as the number of flues is the same in both forms, more room for the circulation of water between the flues is afforded in the straight boiler, on account of its larger diameter, than in the wagon-top shape. Since 1880 the use of two domes has been

Digitized by Google

exceptional, both wagon-top and straight boilers being constructed with one dome.

In 1868, a locomotive of three and a half feet gauge was constructed for the Averill Coal and Oil Company, of West Virginia. This was the first narrow-gauge locomotive in the practice of the works.

In 1869 three locomotives of the same gauge were constructed for the União Valenciana Railway of Brazil, and were the first narrow-gauge locomotives constructed at these work for general passenger and freight traffic. In the following year the Denver and Rio Grande Railway, of Colorado, was projected on the three-feet gauge, and the first locomotives for the line were designed and built in 1871. Two classes, for passenger and freight respectively, were constructed. The former were six-wheeled, four wheels coupled forty inches in diameter, nine by sixteen cylinders, and weighed each, loaded, about twenty-five thousand pounds. The latter were eight-wheeled, six-wheels coupled thirty-six inches in diameter, eleven by sixteen cylinders, and weighed each, loaded, about thirty-five thousand pounds. Each had a swinging-truck of a single pair of wheels in front of the cylinders. The latter type has been maintained for freight service up to the present time, but principally of larger sizes, engines as heavy as fifty thousand pounds having been turned out. The former type for passenger service was found to be too small and to be unsteady on the track, owing to its comparatively short wheel-base. It was therefore abandoned, and the ordinary "American" pattern, eight-wheeled, four-coupled, substituted. Following the engines for the Denver and Rio Grande Railway, others for other narrow-gauged lines were called for, and the manufacture of this description of rolling stock soon assumed importance.

The "Consolidation" type, as first introduced for the four feet eight and one half inches gauge in 1866, was adapted to the three-feet gauge in 1873. In 1877, a locomotive on this plan, weighing in working order about sixty thousand pounds, with cylinders fifteen by twenty, was built for working the Garland extension of the Denver and Rio Grande Railway, which crosses the Rocky Mountains with maximum grades of two hundred

Digitized by Google

and eleven feet per mile, and minimum curves of thirty degrees. The performance of this locomotive, the "Alamosa," is given in the following extract from a letter from the then General Superintendent of that railway:

"DENVER, COL., Aug. 31, 1877.

"On the 29th inst. I telegraphed you from Veta Pass—Sangre de Cristo Mountains—that engine 'Alamosa' had just hauled from Garland to the Summit one baggage car and seven coaches, containing one hundred and sixty passengers. Yesterday I received your reply asking for particulars, etc.

"My estimate of the weight was eighty-five net tons, stretched over a distance of three hundred and sixty feet, or including the engine, of four hundred and five feet

"The occasion of this sized train was an excursion from Denver to Garland and return. The night before, in going over from La Veta, we had over two hundred passengers, but it was 8 P.M., and, fearing a slippery rail, I put on engine No. 19 as a pusher, although the engineer of the 'Alamosa' said he could haul the train, and I believe he could have done so. The engine and train took up a few feet more than the half circle at 'Mule Shore,' where the radius is one hundred and ninety-three feet. The engine worked splendidly, and moved up the two hundred and eleven feet grades and around the thirty degree curves seemingly with as much ease as our passenger engines on 75 feet grades with three coaches and baggage cars.

"The 'Alamosa' hauls regularly eight loaded cars and caboose, about one hundred net tons; length of train about two hundred and thirty feet.

"The distance from Garland to Veta Pass is fourteen and one-quarter miles, and the time is one hour and twenty minutes.

"Respectfully yours,

(Signed) "W. W. BORST, *Sup't.*"

In addition to narrow-gauge locomotives for the United States, this branch of the product has included a large number of one-metre gauge locomotives for Brazil, three-feet gauge locomotives for Cuba, Mexico, and Peru, and three and one-half feet gauge stock for Costa Rica, Nicaragua, Canada, and Australia.

Locomotives for single-rail railroads were built in 1878 and early in 1879, adapted respectively to the systems of General Roy Stone and Mr. W. W. Riley.

Mine locomotives, generally of narrow gauge, for underground work, and not over five and one-half feet in height, were first built in 1870. These machines have generally been four-wheels-connected, with inside cylinders and a crank-axle. The width over all of this plan is only sixteen inches greater than the gauge of the track. A number of outside-connected mine locomotives have, however, also been constructed. In this

Digitized by Google

pattern the width is thirty-two inches greater than the gauge of the track. A locomotive of twenty inches gauge for a gold mine in California was built in 1876, and was found entirely practicable and efficient.

In 1870, in some locomotives for the Kansas Pacific Railway, the steel tires were shrunk on without being secured by bolts or rivets in any form, and since that time this method of putting on tires has been the rule.

In 1871 forty locomotives were constructed for the Ohio and Mississippi Railway, the gauge of which was changed from five feet six inches to four feet eight and one-half inches. The entire lot of forty locomotives was completed and delivered in about twelve weeks. The gauge of the road was changed on July 4, and the forty locomotives went at once into service in operating the line on the standard gauge.

During the same year two "double-end" engines of Class 10–26¼ C, as described in catalogue, were constructed for the Central Railroad of New Jersey, and were the first of this pattern at these works.

The product of the works, which had been steadily increasing for some years in sympathy with the requirements of the numerous new railroads which were constructing, reached three hundred and thirty-one locomotives in 1871, and four hundred and twenty-two in 1872. Orders for ninety locomotives for the Northern Pacific Railroad were entered during 1870–71, and for one hundred and twenty-four for the Pennsylvania Railroad during 1872–73, and mostly executed during those years. A contract was also made during 1872 with the Veronej-Rostoff Railway of Russia for ten locomotives to burn Russian anthracite coal. Six were "Moguls," with cylinders nineteen by twenty-four, and driving-wheels four and one-half feet diameter; and four were passenger locomotives, "American" pattern, with cylinders seventeen by twenty-four, and driving-wheels five and one-half feet diameter. Nine "American" pattern locomotives, fifteen by twenty-four cylinders, and five feet driving-wheels, were also constructed in 1872–73 for the Hango-Hyvinge Railway of Finland.

Early in 1873, Mr. Baird retired from the business, having sold

Digitized by Google

his interest in the works to his five partners. Mr. Baird died May 19, 1877. A new firm was formed under the style of Burnham, Parry, Williams & Co., dating from January 1, 1873, and Mr. John H. Converse, who had been connected with the works since 1870, became a partner. The product of this year was four hundred and thirty-seven locomotives, the greatest in the history of the business. During a part of the year ten locomotives per week were turned out. Nearly three thousand men were employed. Forty-five locomotives for the Grand Trunk Railway of Canada were built in August, September, and October, 1873, and all were delivered in five weeks after shipment of the first. As in the case of the Ohio and Mississippi Railway, previously noted, these were to meet the requirements of a change of gauge from five and one-half feet to four feet eight and one half inches. In November, 1873, under circumstances of especial urgency, a small locomotive for the Meier Iron Company of St. Louis was wholly made from the raw material in sixteen working days.

The financial difficulties which prevailed throughout the United States, beginning in September, 1873, and affecting chiefly the railroad interests and all branches of manufacture connected therewith, have operated of course to curtail the production of locomotives since that period. Hence, only two hundred and five locomotives were built in 1874, and one hundred and thirty in 1875. Among these may be enumerated two sample locomotives for burning anthracite coal (one passenger, sixteen by twenty-four cylinders, and one "Mogul" freight, eighteen by twenty-four cylinders) for the Technical Department of the Russian Government; also, twelve "Mogul" freight locomotives, nineteen by twenty-four cylinders, for the Charkoff Nicolaieff Railroad of Russia. A small locomotive to work by compressed air, for drawing street cars, was constructed during 1874 for the Compressed Air Locomotive and Street Car Company of Louisville, Ky. It had cylinders seven by twelve, and four wheels coupled, thirty inches in diameter. Another and smaller locomotive to work by compressed air was constructed three years later for the Plymouth Cordage Company of Massachusetts, for service on a track in and about their works. It had cylinders

Digitized by Google

five by ten, four wheels coupled twenty-four inches diameter, weight, seven thousand pounds, and has been successfully employed for the work required.

The year 1876, noted as the year of the Centennial International Exhibition in Philadelphia, brought some increase of business, and two hundred and thirty-two locomotives were constructed. An exhibit consisting of eight locomotives was prepared for this occasion. With the view of illustrating not only different types of American locomotives, but the practice of different railroads, the exhibit consisted chiefly of locomotives constructed to fill orders from various railroad companies of the United States, and from the Imperial Government of Brazil. A "Consolidation" locomotive for burning anthracite coal, for the Lehigh Valley Railroad, for which line the first locomotive of this type was designed and built in 1866; a similar locomotive, to burn bituminous coal, and a passenger locomotive for the same fuel for the Pennsylvania Railroad; a "Mogul" freight locomotive, the "Principe do Grão Pará," for the D. Pedro Segundo Railway of Brazil; and a passenger locomotive (anthracite burner) for the Central Railroad of New Jersey, comprised the larger locomotives contributed by these works to the Exhibition of 1876. To these were added a mine locomotive and two narrow (three feet) gauge locomotives which were among those used in working the Centennial Narrow-Gauge Railway. As this line was in many respects unique, we subjoin the following extracts from an account by its General Manager of the performance of the two three feet gauge locomotives:

"The gauge of the line was three feet, with double track three and a half miles long, or seven miles in all. For its length it was probably the most crooked road in the world, being made up almost wholly of curves, in order to run near all the principal buildings on the Exhibition grounds. Many of these curves were on our heaviest grades, some having a radius of 215, 230, and 250 feet on grades of 140 and 155 feet per mile. These are unusually heavy grades and curves, and when *combined* as we had them, with only a thirty-five pound iron rail, made the task for our engines exceedingly difficult.

"Your locomotive 'Schuylkill,' Class 8–18 C (eight-wheeled, four wheels coupled three and a half feet diameter, cylinders twelve by sixteen, weight forty-two thousand six hundred and fifty pounds), began service May 13, and made one hundred and fifty-six days to the close of the Exhibition. The locomotive 'Delaware,' Class 8–18 D (eight-wheeled, six wheels coupled three feet diameter, cylinders twelve by sixteen,

Digitized by Google

weight thirty-nine thousand pounds), came into service June 9, and made one hundred and thirty-one days to the close of the Exhibition. The usual load of each engine was five eight-wheeled passenger cars, frequently carrying over one hundred passengers per car. On special occasions as many as six and seven loaded cars have been drawn by one of these engines.

"Each engine averaged fully sixteen trips daily, equal to fifty-six miles, and, as the stations were but a short distance apart, the Westinghouse air-brake was applied in making one hundred and sixty daily stops, or a total of twenty-five thousand for each engine. Neither engine was out of service an hour unless from accidents for which they were in no way responsible."

[NOTE.—Average weight of each loaded car about twelve gross tons.]

The year 1876 was also marked by an extension of locomotive engineering to a new field in the practice of these works. In the latter part of the previous year an experimental steam street car was constructed for the purpose of testing the applicability of steam to street railways. This car was completed in November, 1875, and was tried for a few days on a street railway in Philadelphia. It was then sent to Brooklyn, December 25, 1875, where it ran from that time until June, 1876. One engineer ran the car and kept it in working order. Its consumption of fuel was between seven and eight pounds of coal per mile run. It drew regularly, night and morning, an additional car, with passengers going into New York in the morning, and returning at night. On several occasions, where speed was practicable, the car was run at the rate of sixteen to eighteen miles per hour.

In June, 1876, this car was withdrawn from the Atlantic Avenue Railway of Brooklyn, and placed on the Market Street Railway of Philadelphia. It worked with fair success, and very acceptably to the public on that line, from June till nearly the close of the Centennial Exhibition.

This original steam-car was built with cylinders under the body of the car, the connecting-rods taking hold of a crank-axle, to which the front wheels were attached. The rear wheels of the car were independent, and not coupled with the front wheels. The machinery of the car was attached to an iron bed-plate bolted directly to the wooden framework of the car body. The experiment with this car demonstrated to the satisfaction of its builders the mechanical practicability of the use of steam on street railways, but the defects developed by this experimental

Digitized by Google

car were: first, that it was difficult, or impossible, to make a crank-axle which would not break, the same experience being reached in this respect which had already presented itself in locomotive construction; second, it was found that great objection existed to attaching the machinery to the wooden car body, which was not sufficiently rigid for the purpose, and which suffered by being racked and strained by the working of the machinery.

For these reasons this original steam-car was reconstructed, in accordance with the experience which nearly a year's service had suggested. The machinery was made "outside-connected," the same as in an ordinary locomotive, and a strong iron framework was designed, entirely independent of the car body, and supporting the boiler and all the machinery.

STEAM STREET CAR.

The car as thus reconstructed was named the "Baldwin," and is shown by the above illustration.

The next step in this direction was the construction of a separate "motor," to which one or more cars could be attached. Such a machine, weighing about sixteen thousand pounds, was constructed in the fall of 1876, and sent to the Citizens' Railway of Baltimore, which has the maximum grades of seven feet per hundred, or three hundred and sixty-nine and six-tenths feet per mile. It ascended the three hundred and sixty-nine feet grade, drawing one loaded car, when the tracks were covered with mixed snow and dirt to a depth of eight to

Digitized by Google

ten inches in places. Another and smaller motor, weighing only thirteen thousand pounds, was constructed about the same time for the Urbano Railway, of Havana, Cuba. Orders for other similar machines followed, and during the ensuing years 1877–78–79–80 one hundred and seven separate motors and

STEAM MOTOR FOR STREET CARS.

twelve steam-cars were included in the product. Various city and suburban railways have been constructed with the especial view of employing steam-power, and have been equipped with these machines. One line, the Hill & West Dubuque Street Railway, of Dubuque, Iowa, was constructed early in 1877, of three and a half feet gauge, with a maximum gradient of nine in one hundred, and was worked exclusively by two of these motors. The details and character of construction of these machines are essentially the same as locomotive work, but they are made so as to be substantially noiseless, and to show little or no smoke and steam in operation.

Steel fire-boxes with vertical corrugations in the side sheets were first made by these works early in 1876, in locomotives for the Central Railroad of New Jersey, and for the Delaware, Lackawanna and Western Railway.

The first American locomotives for New South Wales and Queensland were constructed by the Baldwin Locomotive Works in 1877, and have since been succeeded by additional orders. Six locomotives of the "Consolidation" type for three and one-half feet gauge were also constructed in the latter year for the Government Railways of New Zealand, and two freight locomotives, six-wheels-connected with forward truck, for the Government of Victoria. Four similar locomotives (ten-wheeled,

Digitized by Google

six-coupled, with sixteen by twenty-four cylinders) were also built during the same year for the Norwegian State Railways.

Forty heavy "Mogul" locomotives (nineteen by twenty-four cylinders, driving-wheels four and one-half feet in diameter) were constructed early in 1878 for two Russian Railways (the Koursk Charkof Azof, and the Orel Griazi). The definite order for these locomotives was only received on the sixteenth of December, 1877, and, as all were required to be delivered in Russia by the following May, especial despatch was necessary. The working force was increased from eleven hundred to twenty-three hundred men in about two weeks. The first of the forty engines was erected and tried under steam on January 5th, three weeks after receipt of order, and was finished, ready to dismantle and pack for shipment, one week later. The last engine of this order was completed February 13th. The forty engines were thus constructed in about eight weeks, besides twenty eight additional engines on other orders, which were constructed wholly or partially, and shipped during the same period.

The production during the years from 1872 to 1895 inclusive was as follows:

1872 . . .	422	locomotives.	
1873 . . .	437	"	
1874 . . .	205	"	
1875 . . .	130	"	
1876 . . .	232	"	
1877 . . .	185	"	
1878 . . .	292	"	
1879 . . .	298	"	
1880 . . .	517	"	
1881 . . .	554	"	
1882 . . .	563	"	(6,000th locomotive completed.)
1883 . . .	557	"	(7,000th locomotive completed.)
1884 . . .	429	"	
1885 . . .	242	"	
1886 . . .	550	"	(8,000th locomotive completed.)
1887 . . .	653	"	
1888 . . .	737	"	(9,000th locomotive completed.)

Digitized by Google

1889	. . .	827	locomotives.
1890	. . .	946	" (11,000th locomotive completed.)
1891	. . .	899	" (12,000th locomotive completed.)
1892	. . .	731	" (13,000th locomotive completed.)
1893	. . .	772	"
1894	. . .	313	" (14,000th locomotive completed.)
1895	. . .	401	"
1896	. . .	547	" (15,000th locomotive completed.)

Four tramway motors of twelve tons weight were built early in 1879, on the order of the New South Wales Government, for a tramway having grades of six per cent., and running from the railway terminus to the Sydney Exhibition Grounds. Subsequently orders have followed for additional motors for other tramways in Sydney.

The five thousandth locomotive, finished in April, 1880, presented some novel features. It was designed for fast passenger service on the Bound Brook line between Philadelphia and New York, and to run with a light train at a speed of sixty miles per hour, using anthracite coal as fuel. It had cylinders eighteen by twenty-four, one pair of driving-wheels six and one-half feet in diameter, and a pair of trailing-wheels forty-five inches in diameter, and equalized with the driving-wheels. Back of the driving-wheels and over the trailing-wheels space was given for a wide fire-box (eight feet long by seven feet wide inside) as required for anthracite coal. By an auxiliary steam cylinder placed under the waist of the boiler, just in front of the fire-box, the bearings on the equalizing beams between trailing- and driving-wheels could be changed to a point forward of their normal position, so as to increase the weight on the driving-wheels when required. The adhesion could thus be varied between the limits of thirty-five thousand to forty-five thousand pounds on the single pair of driving-wheels. This feature of the locomotive was made the subject of a patent.

In 1881, a compressed-air locomotive was constructed for the Pneumatic Tramway Engine Company, of New York, on plans prepared by Mr. Robert Hardie. Air-tanks of steel, one-half inch thick, with a capacity of four hundred and sixty-five cubic

Digitized by Google

feet were combined with an upright cylindrical heater, thirty-two and five-eighths inches in diameter. The weight of the machine was thirty-five thousand pounds, of which twenty-eight thousand pounds were on four driving-wheels, forty-two inches in diameter. The cylinders were twelve and a half inches diameter by eighteen inches stroke. Another novelty of the year was a steam-car to take the place of a hand-car. Accompanying illustration shows the design. Its cylinders were four by ten inches, and wheels twenty-four inches diameter. Built for standard gauge track, its weight in working order was five thousand one hundred and ten pounds. Similar cars have since been constructed. During this year the largest single order ever placed on the books was entered for the Mexican National Construction Company. It was for one hundred and fifty locomotives, but only a portion of them were ever built.

STEAM INSPECTION CAR.

The year 1882 was marked by a demand for locomotives greater than could be met by the capacity of existing locomotive works. Orders for one thousand three hundred and twenty-one locomotives were entered on the books during the year, deliveries of the greater part being promised only in the following year. The six-thousandth locomotive was completed in January of this year, and the seven-thousandth in October, 1883.

Early in 1882, an inquiry was received from the Brazilian Government, for locomotives for the Cantagallo Railway, which were required to meet the following conditions:—To haul a train of forty gross tons of cars and lading up a grade of eight and three-tenths per cent. (four hundred and thirty-eight feet per mile), occurring in combination with curves of forty metres radius (one hundred and thirty-one feet radius, or forty-three and eight-tenths degrees). The line is laid with heavy steel rails, and the gauge is one and one-tenth metres, or three feet seven and one-third inches. The track upon which it was proposed to run

Digitized by Google

these locomotives is a constant succession of reverse curves, it being stated that ninety-one curves of the radius named occur within a distance of three thousand four hundred and twenty-nine metres, or about two miles. The line had previously been operated on the "Fell" system, with central rack rail, and it was proposed to introduce locomotives working by ordinary adhesion, utilizing the central rail for the application of brake power. An order was eventually received to proceed with the construction of three locomotives to do this work. The engines built were of the following general dimensions: viz.—Cylinders eighteen by twenty inches; six driving-wheels connected, thirty-nine inches in diameter; wheel-base nine feet six inches; boiler fifty-four inches in diameter, with one hundred and ninety flues two inches diameter, ten feet nine inches long; and with side tanks, carried on the locomotive. In March, 1883, they were shipped from Philadelphia, and on a trial made October 17, in the presence of the officials of the road, and other prominent railway officers, the guaranteed performance was accomplished. One of the engines pulled a train weighing forty tons, composed of three freight cars loaded with sleepers and one passenger car, and made the first distance of eight kilometres to Bqca do Mato with a speed of twenty-four kilometres per hour; from there it started, making easily an acclivity of eight and five-tenths per cent. in grade, and against a curve of forty metres in radius. Eight additional locomotives for this line were constructed at intervals during the following ten years, and the road has been worked by locomotives with ordinary adhesion since their adoption as above described.

In 1885 a locomotive was built for the Dom Pedro Segundo Railway of Brazil, having five pairs of driving-wheels connected and a leading two-wheeled truck. From this has arisen the title "Decapod" (having ten feet) as applied to subsequent locomotives of this type. Its cylinders were twenty-two by twenty-six inches; driving-wheels forty-five inches diameter and grouped in a driving-wheel-base of seventeen feet. The rear flanged driving-wheels, however, were given one-quarter of an inch more total play on the rails than the next adjacent pair; the second and third pairs were without flanges, and the front pair was

Digitized by Google

flanged. The locomotive could therefore pass a curve of a radius as short as five hundred feet, the rails being spread one-half inch wider than the gauge of track, as is usual on curves. The flanges of the first and fourth pairs of driving-wheels, making practically a rigid wheel-base of twelve feet eight inches, determined the friction on a curve. The weight of the engine in working order was one hundred and forty-one thousand pounds, of which one hundred and twenty-six thousand pounds were on the driving-wheels. During this year the first rack-rail locomotive in the practice of these works was constructed for the Ferro Principe do Grão Pará Railroad of Brazil. An illustration of same is given herewith. Its general dimensions were: Cylinders, twelve by twenty inches; pitch line of cog-wheel, 41.35 inches; weight, 15.74 tons. Several additional similar locomotives, but of different weights, have since been constructed for the same line.

At the close of this year, Mr. Edward Longstreth withdrew from the firm on account of ill health, and a new partnership was formed, adding Messrs. William C. Stroud, William H. Morrow, and William L. Austin. Mr. Stroud had been connected with the business since 1867, first as book-keeper and subsequently as Financial Manager. Mr. Morrow, since entering the service in 1871, had acquired a varied and valuable experience, first in the accounts, then in the department of extra work, and subsequently

LOCOMOTIVE WITH OUTSIDE FRAMES.

as Assistant Superintendent, becoming General Manager on Mr. Longstreth's retirement. Mr. Austin, who entered the works in 1870, had for several years been assistant to Mr. Henszey in all matters connected with the designing of locomotives. The eight-thousandth locomotive was completed in June, 1886. A loco-

Digitized by Google

motive for the Antofogasta Railway (thirty inches gauge) of Chili, constructed with outside frames, was completed in November, 1886, and is illustrated on page 77. The advantages of this method of construction of narrow-gauge locomotives in certain cases were evidenced in the working of this machine, in giving a greater width of fire-box between the frames and a greater stability of the engine due to the outside journal bearings.

In 1887 a new form of boiler was brought out in some ten-wheeled locomotives constructed for the Denver and Rio Grande Railroad. A long wagon-top was used, extending sufficiently forward of the crown-sheet to allow the dome to be placed in front of the fire-box and near the centre of the boiler, and the crown-sheet was supported by radial stays from the outside shell. Many boilers of this type have since been constructed.

Mr. Charles T. Parry, who had been connected with the works almost from their beginning and a partner since 1867, died on July 18, 1887, after an illness of several months.

The first locomotives for Japan were shipped in June, 1887, being two six-wheeled engines of three feet six inch gauge for the Mie Kie mines.

Mr. William H. Morrow, a partner since January 1, 1886, and who had been previously associated with the business since 1871, died February 19, 1888.

RACK LOCOMOTIVE, RIGGENBACH SYSTEM.

The demand for steam motors for street railway service attained large proportions at this period, and ninety-five were built during the years 1888 and 1889. Two rack-rail locomotives on the Riggenbach system, one with a single cog-wheel and four carrying-wheels, and weighing in working order thirty-two thousand pounds, for the Corcovado Railway of Brazil, and the other having two cog-wheels and eight carrying-wheels, and weighing in working order seventy-nine thousand pounds, for the Estrada de Ferro Principe do Grão Pará of

Digitized by Google

Brazil, were constructed during this year. The general plans are shown by accompanying illustrations.

In October, 1889, the first compound locomotive in the practice of the works was completed and placed on the Baltimore and Ohio Railroad. It was of the four-cylinder type, as designed and patented by Mr. S. M. Vauclain, who had been connected with the works since 1883 and its General Superintendent since February 11, 1886. The economy in fuel and water and the efficiency in both passenger and freight service given by this design led to its introduction on many leading railroads. Following the first four-cylinder compound locomotive built in 1889, three were built in 1890, eighty-two in 1891, two hundred and thirteen in 1892, one hundred and sixty in 1893, thirty in 1894, fifty-one in 1895, and one hundred and seventy-three during 1896.

RACK LOCOMOTIVE, WITH TWO COG-WHEELS.

In 1889 a test case was made to see in how short a time a locomotive could be built. On Saturday, June 22d, Mr. Robert H. Coleman ordered a narrow-gauge "American" type passenger locomotive and tender, which it was agreed should be ready for service on his railroad in Lebanon County, Pa., by the fourth of July following. The boiler material was at once ordered and was received Tuesday, June 25th. The boiler was completed and taken to the Erecting Shop on Friday, June 28th, and on Monday, July 1st, the machinery, frames, wheels, etc., were attached and the locomotive was tried under steam in the works. The tender was completed the following day, Tuesday, July 2d, thus making the record of construction of a complete locomotive from the raw material of the art in eight working days.

The manufacture of wrought iron wheel-centres for both truck and driving-wheels was begun at this time under patents of Mr. S. M. Vauclain, Nos. 462,605, 462,606, and 531,487.

In 1890 the first rack-rail locomotive on the Abt system was constructed for the Pikes' Peak Railroad, and during this year and 1893 four locomotives were built for working the

Digitized by Google

grades of that line, which vary from eight to twenty-five per cent. One of these locomotives, weighing in working order fifty-two thousand six hundred and eighty pounds, pushes twenty-five thousand pounds up the maximum grades of one in four. We give herewith an illustration of one of these locomotives, which is a four-cylinder "Compound."

RACK LOCOMOTIVE, ABT SYSTEM.

Three "Mogul" locomotives, of one metre gauge, fifteen by eighteen cylinders, driving-wheels forty-one inches diameter, were completed and shipped in July, 1890, for working the Jaffa and Jerusalem Railway in Palestine, and two additional locomotives for the same line were constructed in 1892.

In 1891 the largest locomotives in the practice of the works were designed and constructed. For the St. Clair Tunnel of the Grand Trunk Railway, under the St. Clair River, four tank locomotives were supplied, each with cylinders twenty-two by twenty-eight; five pairs of driving-wheels connected, fifty inches diameter, in a wheel-base of eighteen feet five inches; boiler, seventy-four inches diameter; fire-box, eleven feet long by three and one-half feet wide; and tanks on the boiler of twenty-one hundred and ten gallons capacity. The weight in working order of each engine was one hundred and eighty-six thousand eight hundred pounds without fire in fire-box. The tunnel is six thousand feet long, with grades of two per cent. at each entrance, twenty-five hundred and nineteen hundred and fifty feet long respectively. Each locomotive was required to take a train load of seven hundred and sixty tons exclusive of its own weight, and in actual operation each of these locomotives has

"DECAPOD."

Digitized by Google

hauled from twenty-five to thirty-three loaded cars in one train through the tunnel.

For the New York, Lake Erie and Western Railroad, five Compound locomotives of the "Decapod" class were completed in December, 1891. Their general dimensions were as follows: Cylinders, high pressure sixteen inches, low pressure twenty-seven inches diameter, stroke twenty-eight inches; five pairs of driving-wheels coupled fifty inches diameter in a wheel-base of eighteen feet ten inches; boiler seventy-six inches diameter; three hundred and fifty-four tubes, two inches diameter, twelve feet long; fire-box (Wootten type) eleven feet long, eight feet two inches wide inside; combustion chamber thirty-six inches long; weight in working order one hundred and ninety-five thousand pounds, weight on driving-wheels one hundred and seventy-two thousand pounds; weight of eight-wheeled tender with fuel and four thousand five hundred gallons of water, eighty-nine thousand four hundred and twenty pounds. The first, fourth, and fifth pairs of driving-wheels were flanged, but the fifth pair had one-fourth inch additional play on the track. These locomotives are used as pushers on the Susquehanna Hill, where curves of five degrees are combined with grades of sixty feet per mile, doing the work of two ordinary "Consolidation" locomotives. From one thousand two hundred and fifty to one thousand three hundred net tons of cars and lading, making a train of forty-five loaded cars, are hauled by one of these locomotives in connection with a twenty by twenty-four cylinder "Consolidation."

S. ELLERO-SALTINO (VALLOMBROSA).

Mr. William C. Stroud, who had been a partner since 1886, died on September 21, 1891.

The first locomotives for Africa were constructed during this year. They were of the "Mogul" type, with cylinders eighteen by twenty-two inches, driving-wheels forty-eight inches diameter, and for three feet six inches gauge.

Digitized by Google

The product for 1892 and 1893 included, as novelties, two rack-rail locomotives for a mountain railway near Florence, Italy, and twenty-five compound "Forney" locomotives for the South Side Elevated Railroad, of Chicago. At the World's Columbian Exposition in Chicago, May to October inclusive, an exhibit was made consisting of seventeen locomotives, as follows:

STANDARD GAUGE.—A Decapod locomotive, similar to those above described, built in 1891 for the New York, Lake Erie and Western Railroad. A high-speed locomotive of new type, with Vauclain compound cylinders, a two-wheel leading truck, two pairs of driving-wheels, and a pair of trailing wheels under the fire-box. This locomotive was named "Columbia," and the same name has been applied to the type. An express passenger locomotive of the pattern used by the Central Railroad of New Jersey; one of the pattern used by the Philadelphia and Reading Railroad, and one of the pattern used by the Baltimore and Ohio Railroad. The three roads mentioned operate together the "Royal Blue Line" between New York and Washington. A saddle tank double-ender type locomotive, with steam windlass, illustrating typical logging locomotive practice. A single expansion 18 x 24 cylinder American type locomotive. A single expansion 19 x 24 cylinder Mogul locomotive. A single expansion 20 x 24 cylinder ten-wheel freight locomotive for the Baltimore and Ohio Southwestern Railroad. A compound ten-wheel passenger locomotive shown in connection with a train exhibited by the Pullman Palace Car Co. A compound Consolidation locomotive for the Norfolk and Western Railroad. Three locomotives were shown in connection with the special exhibit of the Baltimore and Ohio Railroad, viz., one compound and one single expansion passenger locomotive, and one ten-wheel passenger locomotive.

NARROW-GAUGE.—A one-metre-gauge compound American type locomotive. A three-foot-gauge ten-wheel compound locomotive, with outside frames, for the Mexican National Railroad, and a thirty-inch-gauge saddle tank locomotive for mill or furnace work.

The depression of business which began in the summer of 1893, reduced the output of the works for that year to seven

Digitized by Google

hundred and seventy-two, and in 1894 to three hundred and thirteen locomotives. Early in 1895, a new type of passenger locomotive was brought out, illustrated by annexed cut. To this the name "Atlantic" type was given. The advantages found in this design are a large boiler, fitting the engine for high speed;

ATLANTIC TYPE.

a fire-box of liberal proportions and desirable form placed over the rear frames, but of ample depth and width; and the location of the driving-wheels in front of the fire-box, allowing the boiler to be placed lower than in the ordinary "American" or "Ten-wheeled" type. For the enginemen, who, in this class of locomotive, ride behind, instead of over the driving-wheels, greater ease in riding, and greater safety in case of the breakage of a side-rod, are important advantages.

The first electric locomotive was constructed in 1895, and was intended for experimental work for account of the North American Company. The electrical parts were designed by Messrs. Sprague, Duncan & Hutchison, Electrical Engineers, New York. Two other electric locomotives for use in connection with mining operations were built in 1896, in co-operation with the Westinghouse Electric Manufacturing Company, which supplied the electrical parts.

ELECTRIC LOCOMOTIVE.

A high-speed passenger locomotive, embracing several novel features, was built in 1895, for service on the New York division

Digitized by Google

of the Philadelphia and Reading Railroad. The boiler was of the Wootten type, the cylinders were compound, thirteen and twenty-two by twenty-six, and the driving-wheels (one pair) were eighty-four and one-quarter inches diameter. The cut below shows the general design.

HIGH-SPEED LOCOMOTIVE.

The weight of the engine in working order was as follows: On front truck, thirty-nine thousand pounds; on trailing wheels, twenty-eight thousand pounds; on the driving-wheels, forty-eight thousand pounds. This locomotive and a duplicate built in the following year, have been regularly used in passenger service, hauling five to eight cars, and making the distance between Jersey City and Philadelphia, ninety miles, in one hundred and five minutes, including six stops.

In July, 1895, a combination rack and adhesion locomotive was constructed for the San Domingo Improvement Company, having compound cylinders eight inches and thirteen inches diameter by eighteen inches stroke to operate two pairs of coupled adhesion wheels, and a pair of single expansion cylinders, eleven inches by eighteen inches, to operate a single rack-wheel constructed upon the Abt system.

COMBINATION RACK AND ADHESION LOCOMOTIVE.

This locomotive was furnished with two complete sets of machinery, entirely independent of each other, and was built with the view eventually to remove the rack attachments and operate the locomotive by adhesion alone.

During the years 1895 and 1896, contracts were executed for

Digitized by Google

UNIV. OF CALIFORNIA

several railroads in Russia, aggregating one hundred and thirty-eight locomotives of the four-cylinder compound type.

On January 1, 1896, Samuel M. Vauclain, Alba B. Johnson, and George Burnham, Jr., were admitted to partnership.

Two combination rack and adhesion locomotives were built in 1896 for the Peñoles Mining Company, of Mexico, having compound cylinders nine and one-half and fifteen inches diameter by twenty-two inches stroke, connected to the driving-wheels through walking-beams. Two pairs of wheels are fixed on the axles and act as adhesion driving-wheels, and the rear wheels are loose on axle and act only as carrying wheels. All three coupled axles carry rack pinions of the Abt system. Those on the axles of the two pairs of wheels used for adhesion are thrown into operation by clutches.

COMBINATION RACK AND ADHESION LOCOMOTIVE.

The record of the Baldwin Locomotive Works has thus been given for sixty-five years of existence and continuous operation. Over fifteen thousand locomotives have been constructed since the "Old Ironsides," in 1831. That engine was nearly a year in building.

The following figures indicate the growth of the works.

Works established	1831
1,000th locomotive built	1861
2,000th " "	1869
3,000th " "	1872
4,000th " "	1876
5,000th " "	1880
6,000th " "	1882
7,000th " "	1883
8,000th " "	1886
9,000th " "	1888
10,000th " "	1889
11,000th " "	1890

Digitized by Google

12,000th locomotive built	1891
13,000th " "	1892
14,000th " "	1894
15,000th " "	1896

It will be seen from the foregoing that, while thirty years were occupied in building the first thousand engines, almost as many were built in the single year of 1890.

The present organization, based upon an annual capacity of one thousand locomotives, equal to three and one-third locomotives per working day, is as follows:

Number of men employed	5100
Hours of labor per man per day	10
Principal departments run continuously, hours per day	24
Horse-power employed	5000
Number of buildings comprised in Works	24
Acreage comprised in Works	16
Number of dynamos for furnishing power to drill presses, punching-machines, shears, cranes, and for lighting	26
Number of electric lamps in service	3000
Consumption of coal in net tons, per week, approximately	1000
Consumption of iron, in net tons, per week, approximately	1500
Consumption of other materials, in net tons, per day, approximately	40

The location, in the largest manufacturing city in America, gives especial facilities and advantages. Proximity to the principal coal and iron regions of the country renders all required materials promptly available. A large permanent population of skilled mechanics employed in similar branches in other Philadelphia workshops, gives an abundant force of expert workmen from which to draw when necessary. All parts of locomotives and tenders, except the boiler and tank plates, the steel tires, and steel castings, chilled wheels, boiler tubes and special patented appliances, are made in the Works from the raw materials.

Digitized by Google

Digitized by Google

Digitized by Google

Digitized by Google

Digitized by Google

Digitized by Google

LIBRARY USE
RETURN TO DESK FROM WHICH BORROWED
LOAN DEPT.
THIS BOOK IS DUE BEFORE CLOSING TIME
ON LAST DATE STAMPED BELOW

LIBRARY USE MAY 1 1972 4 5

REC'D LD MAY 1 72 -4 PM

LIBRARY USE ONLY
OCT 01 1989
CIRCULATION DEPT.

RECEIVED BY
OCT 0 4 1989
CIRCULATION DEPT.

LD62A-30m-2,'71
(P2003s10)9412A-A-22

General Library
University of California
Berkeley

LD 21-100m-12

Digitized by Google

U.C. BERKELEY LIBRARIES
C022605596

TJ625
B3
1907
435951
UNIVERSITY OF CALIFORNIA LIBRARY

Digitized by Google

Digitized by Google